Product overview

Axial flow pumps

AH high pressure axial flow pump

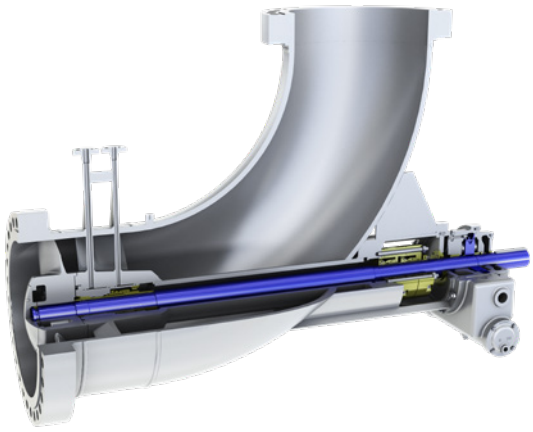

Features and benefits
- High pressure design, casing designed to ASME section VIII division 1
- Double or triple mechanical seal for 5-year service life target
- Pump design and construction according to API 610 / ISO 13709 principles
- Hand polished internals for superior surface finish
- Suspended pump or sprung baseplate to allow for thermal expansion

Key characteristics

Capacities	up to 18'000 m^3/h / 80'000 USgpm
Heads	up to 45 m / 150 ft.
Pressures	up to 100 bar / 1'500 psi
Temperatures	up to 200ºC / 400ºF

Applications
- Polymer slurries
- Reactor circulation in PE/PP plants

CAHR axial flow pump

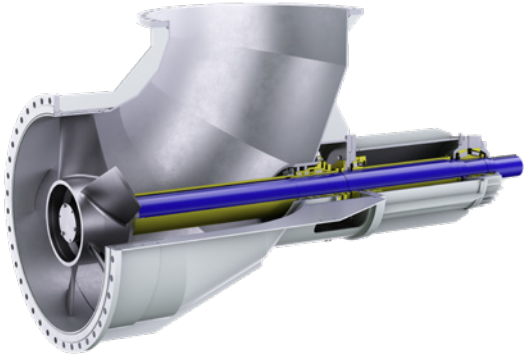

Features and benefits
- High efficiency in high flow and low head applications
- High durability due to its heavy-duty construction
- Maximum reliability
- Low maintenance cost

Key characteristics

Capacities	up to 40'000 m^3/h / 176'000 USgpm
Heads	up to 9 m / 29 ft.
Pressures	up to 10 bar / 145 psi
Temperatures	from -40°C to 180ºC / -202°F to 356ºF

Applications
- Corrosive and abrasive liquids
- Solid-contaminated liquids
- Chemicals
- Evaporation
- Crystallization
- Mining/minerals

CAHR-V vertical axial flow pump



Features and benefits
- Tailor-made design as per project requirements
- High efficiency in high flow and low head applications
- High durability due to its heavy-duty construction
- Maximum reliability

Key characteristics

Capacities	up to 40’000 m^3/h / 176’000 USgpm
Heads	up to 9 m / 29 ft.
Pressures	up to 10 bar / 145 psi
Temperatures	from -40°C to 180ºC / -202°F to 356ºF

Applications
- Mainly used as a forced-feed circulator or closed loop under a vacuum circulator
- Corrosive slurries in low-level flash cooler and phosphoric acid slurry circulation

Axially-split pumps

HPDM axially-split, between bearing, single or multistage pump

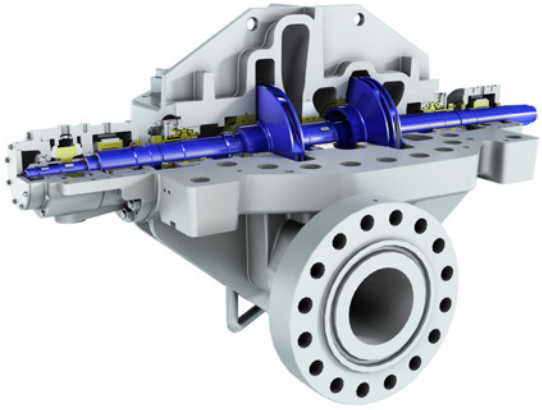

Features and benefits
- Optimum technical solution due to a tailor-made design for each application
- Wide range of proven hydraulics allows high efficiency and suction performance
- Sturdy design with generous safety margins for long life of reliable service with minimum maintenance
- Proven experience backed by extensive list of references
- Technical support provided to customers from the early phases of the project design, allowing sound and cost-effective solutions for each application

Key characteristics

Capacities	up to 20’000 m^3/h / 88’000 USgpm
Heads	up to 700 m / 2’300 ft.
Pressures	up to 175 bar / 2’500 psi
Temperatures	up to 70ºC / 160ºF

Applications
- Water transport
- Large crude oil pipelines
- Any other high flow, high head application

HSA axially-split, single stage pump ISO 13709 / API 610 type BB1

Features and benefits
- Between bearing design for reliability at high flow rates
- Double suction impeller for low NPSH3
- First critical speed is well above operating speed range for smooth operation
- Shared bearing design and components with HSB pump

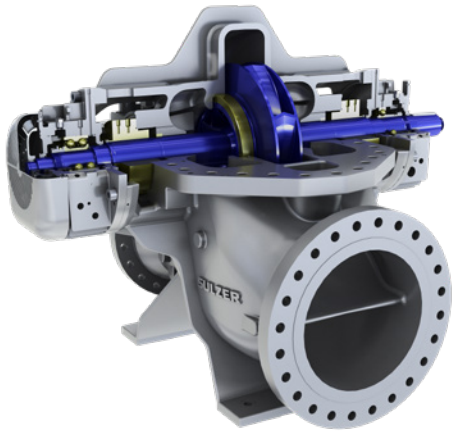

Key characteristics

Capacities	up to 18'000 m^3/h / 80'000 USgpm
Heads	up to 260 m / 850 ft.
Pressures	up to 34 bar / 490 psi
Temperatures	up to 150°C / 300°F

Applications
- Cooling water
- Tank farm
- Booster applications
- Export/loading pumps

HSB axially-split, between bearing, single stage pump ISO 13709 / API 610 type BB1

Features and benefits
- Staggered vane, double suction impeller on larger sizes for reduced vibration
- Custom hydraulics to meet both current and future requirements with a simple rotor / volute changes
- Ball-ball, sleeve-ball and sleeve-pivot shoe bearings are available
- High-speed designs available for remote gas turbine-driven applications

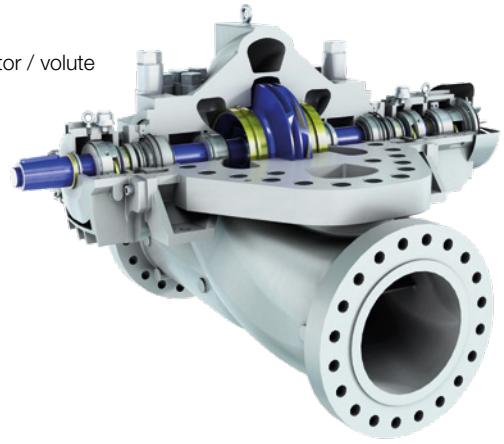

Key characteristics

Capacities	up to 10'000 m^3/h / 45'000 USgpm
Heads	up to 550 m / 1'800 ft.
Pressures	up to 150 bar / 2'200 psi
Temperatures	up to 205°C / 400°F

Applications
- Crude oil pipelines
- Heavy duty auxiliary applications
- Medium pressure applications in desalination and water transport

MSD axially-split, multistage pumps ISO 13709 / API 610 type BB3

Features and benefits
- Broadest hydraulic coverage of any BB3 type multistage pump in the market
- Axially split casing means rotor balance is not disturbed when rotor is installed
- Opposed impellers balance axial thrust, saving lube system costs on most applications
- Double suction, first-stage available on most sizes for reduced Net Positive Suction Head (NPSH)
- High speed option for gas turbine drive

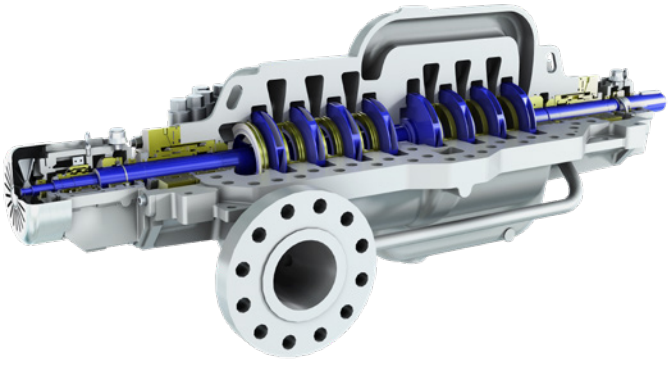

Key characteristics

Capacities	up to 3'200 m^3/h / 14'000 USgpm
Heads	up to 2'900 m / 9'500 ft.
Pressures	up to 300 bar / 4'400 psi
Temperatures	up to 205°C / 400ºF

Applications
- Refined product pipelines
- Water injection
- CO_2 pipeline and injection
- Crude oil export
- Industrial boiler feedwater
- Lean amine circulation

MSD-RO axially-split, multistage pump

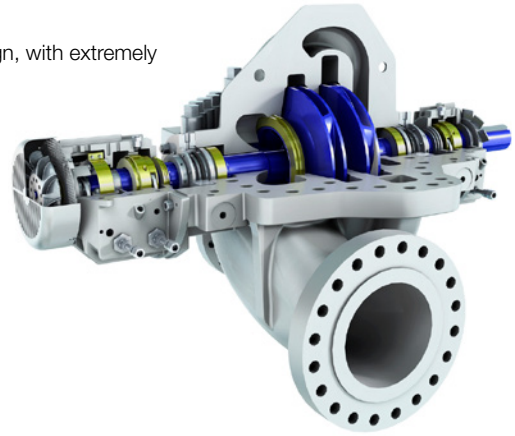

Features and benefits
- Hydraulic configuration with two single suction impellers offers a compact design, with extremely low Net Positive Suction Head (NPSH) values and top of its class efficiency
- Special opposed, dynamically balanced impeller design for ideal axial thrust balance, increasing the overall pump efficiency by avoiding the use of balancing line
- Reduced wear parts clearances by using PEEK or honeycomb to increase pump efficiency

Key characteristics

Capacities	up to 1’600 m3/h / 7’000 USgpm
Heads	up to 650 m / 2’150 ft.
Pressures	up to 110 bar / 1’305 psi
Temperatures	up to 60°C / 140°F

Applications
- High pressure membrane feed pump in Seawater Reverse Osmosis (SWRO)
- Water transport

MSN-RO axial split multistage membrane feed pump

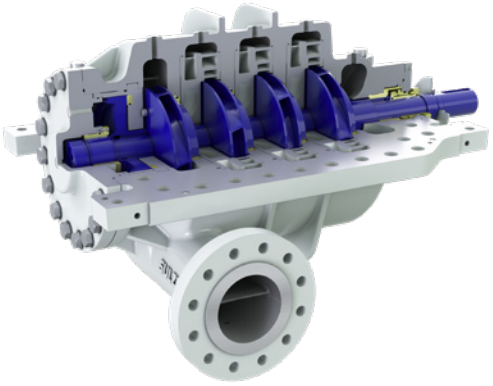

Features and benefits
- A proven, robust design that has been fine-tuned over years of operating in the desalination sector
- Optimized pump efficiency and reduced energy consumption
- A combination of hydraulic design, optimum efficiency and proven reliability gives lowest operational costs

Key characteristics

Capacities	up to 1’450 m^3/h / 7’680 USgpm
Heads	up to 840 m / 2’940 ft.
Pressures	up to 100 bar / 1’450 psi
Temperatures	up to 50°C / 122°F

Applications
- Purpose-designed for RO applications

SMD axially-split, double suction pump

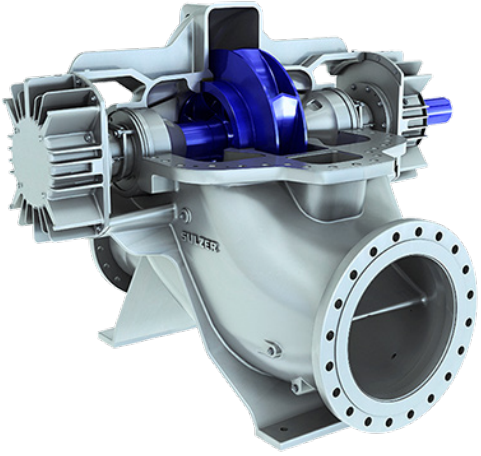

Features and benefits
- Optimum hydraulic fit with high efficiency maintained over a wider flow range
- Exceptionally low Net Positive Suction Head Required (NPSHR) value not only at the best efficiency point but also on overload
- Maintenance-friendly features; excellent interchangeability of parts
- Horizontal and vertical constructions
- Suitable for drinking water with ACS and NSF61/372 certification

Key characteristics

Capacities	up to 24’000 m^3/h / 106’000 USgpm
Heads	up to 260 m / 850 ft.
Pressures	up to 34 bar / 490 psi
Temperatures	up to 140°C / 280°F

Applications
- Water intake, transport and supply
- Desalination
- Water treatment
- District heating and cooling
- Industrial water applications

ZPP axially-split, double suction pump

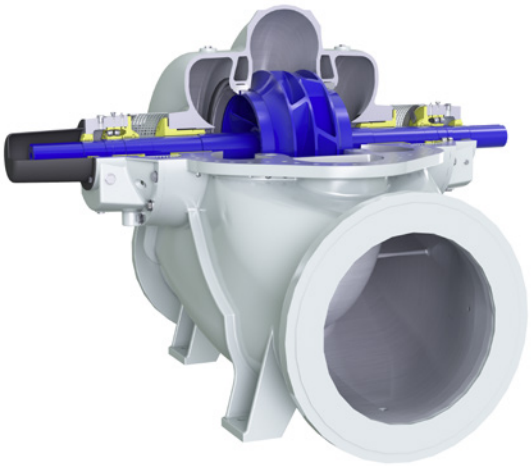

Features and benefits

- Long and trusted experience in all industrial segments
- Low pressure-pulsation pump
- Excellent performance
- Suitable for the most demanding industrial requirements
- Exceeds requirements of international ISO 5199 standard
- Unique and superior design features minimize life cycle costs
- Quick and easy installation, safe operation, easy maintenance and service

Key characteristics

Capacities	up to 25’000 m^3/h / 110’000 USgpm
Heads	up to 160 m / 525 ft.
Pressures	up to 20 bar / 290 psi
Temperatures	up to 120ºC / 250ºF

Applications

- Clean and lightly contaminated liquids
- Viscous liquids
- Low-consistency fibrous slurries
- Low-pressure pulsation pumping applications

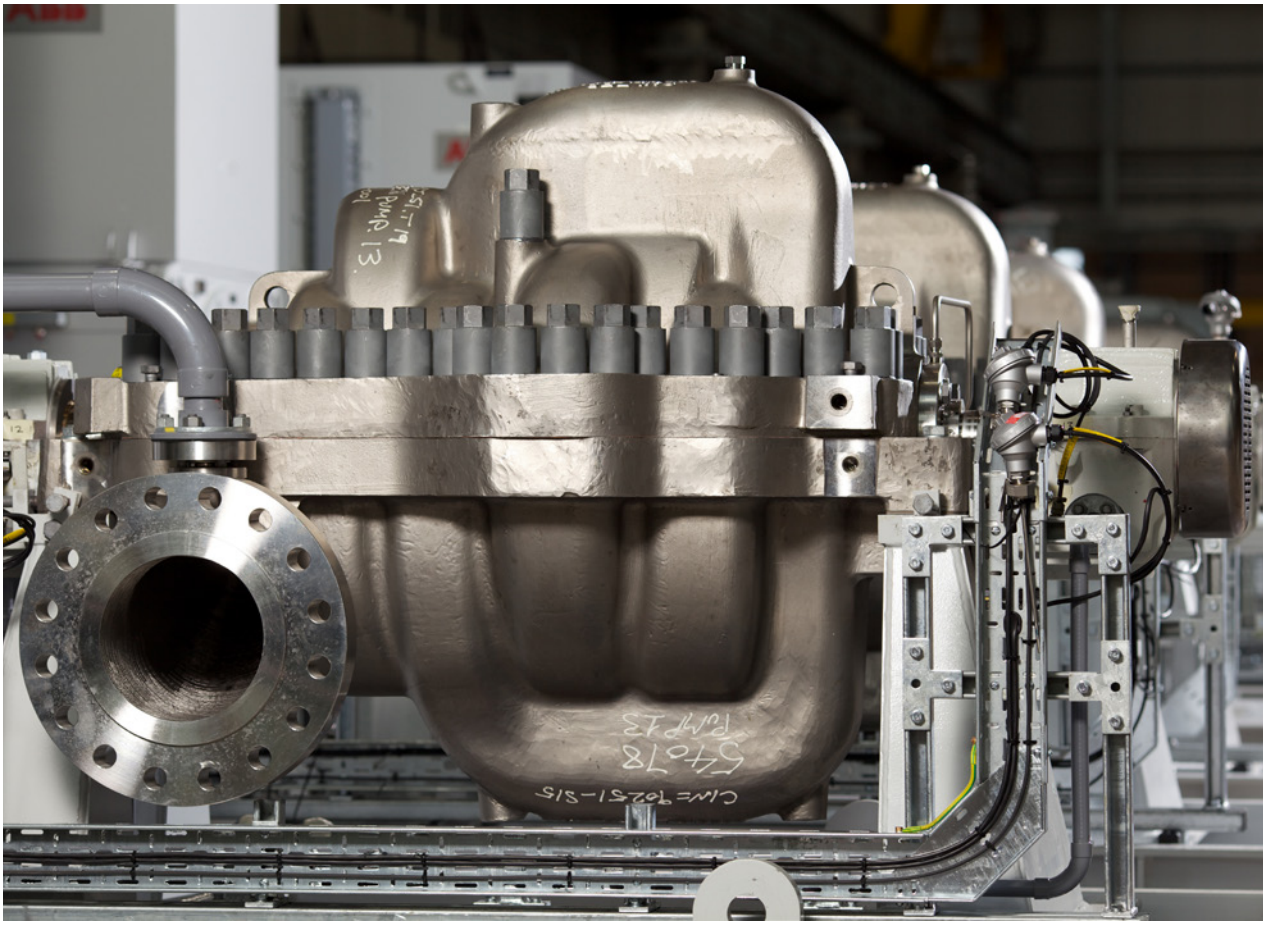

Multiphase pumps

MPP high performance multiphase pump

Features and benefits
- Helico-axial impeller designed for any Gas Volume Fraction (GVF) from 0 to 100%
- Helico-axial stages axially compress the pumped product to avoid separation and gas binding
- Stage design changes to compensate for gas compression through the pump
- Horizontal or vertical configurations to fit the application
- Variety of sizes available from 1 to 6 MW to suit the feld development, production and decline



Key characteristics

Capacities	up to 4'500 m^3 / 700'000 BPD
Heads	up to 180 bar dP / 2'600 psi dP
Pressures	up to 1'100 bar / 16'000 psi
Temperatures	1 to 250°C / 34 to 480°F

Applications
- Onshore multiphase or hybrid pressure boosting and transport
- Offshore topside multiphase or hybrid pressure boosting
- Subsea multiphase or hybrid pressure boosting, water injection and transport
- Revive dead wells or increase total recovery

MPP-OHH single stage multiphase pump

Features and benefits
- Helico-axial impeller designed for any Gas Volume Fraction (GVF) from 0 to 100%
- Helico-axial easily handles robust to solid particles (specific coating can be applied depending on the process)
- Standard bearing frame the OHH bearing range designed for long bearing life
- API 682 cartridge seal type, single or dual mechanical seals

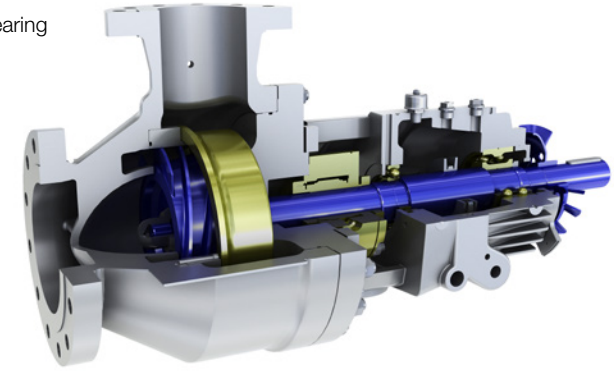

Key characteristics

Capacities	up to 1'000 m^3 / 4'400 US gpm
Heads	up to 7 bar dP / 100 psi dP
Pressures	up to 51 bar / 740 psi
Power	up to 400 kW
Maximum speed of rotation	up to 3600 rpm

Applications
- Shell Omega process (monoethylene glycol process plant)
- Petrochemical processes near liquid-vapor saturation line
- Circulation pumps in fermentation process
- DAF waste water applications

Radially-split, multistage, barrel pumps

CP radially-split, multistage barrel pump ISO 13709 / API 610 type BB5

Features and benefits
- Opposed impellers balance axial thrust, with no lube system needed on smaller pumps
- Axially split inner case means rotor balance is not disturbed when installed in the pump
- Dual volute inner case balances radial loads for longer service life
- Twistlock barrel closure reduces maintenance time on lower temperature services
- Cartridge design on larger pumps can speed up pump repair time
- Volute inner case with lower erosion wear on abrasive services

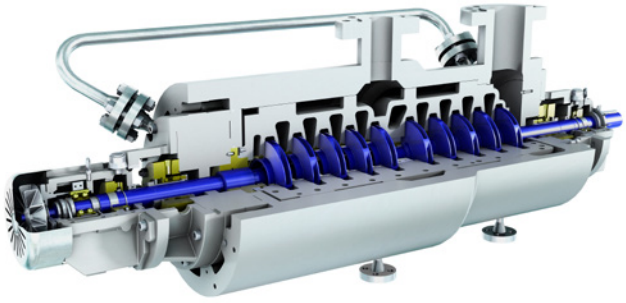

Key characteristics

Capacities	up to 1’000 m^3/h / 4’400 USgpm
Heads	up to 7’000 m / 23’000 ft.
Pressures	up to 425 bar / 6’250 psi
Temperatures	up to 425°C / 800°F

Applications
- Water injection
- Offshore crude oil shipping
- Refinery charge
- Boiler feedwater
- Nuclear safety services

GSG diffuser style barrel pump ISO 13709 / API 610 type BB5

Features and benefits
- Low-pressure, high-pressure, twistlock, and high-temperature designs suit many applications
- Direct drive options up to 6 MW
- Back-to-back rotor stack allows up to 16 stages on low-density fluids
- Multiple sizes cover a broad hydraulic range

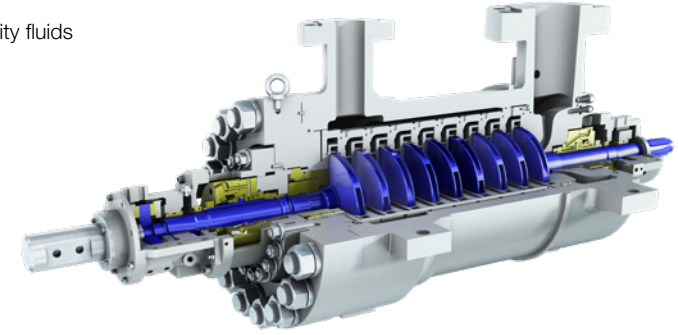

Key characteristics

Capacities	up to 900 m^3/h / 4’600 USgpm
Heads	up to 2’600 m / 10’000 ft.
Pressures	up to 300 bar / 4’500 psi
Temperatures	up to 425°C / 800°F

Applications
- Onshore or offshore water injection
- Offshore crude oil shipping
- Refinery charge
- Boiler feedwater

GSG-BFP diffuser style barrel pump

Features and benefits
- Maximum safety due to double casing design, pipework connections remain undisturbed during disassembly
- High strength barrel material to accept occasional thermal shock
- Full cartridge pull out for rapid change over
- Design features to eliminate the need for pre-warming in most installations except on larger sizes
- Long operating life regardless of the operating mode

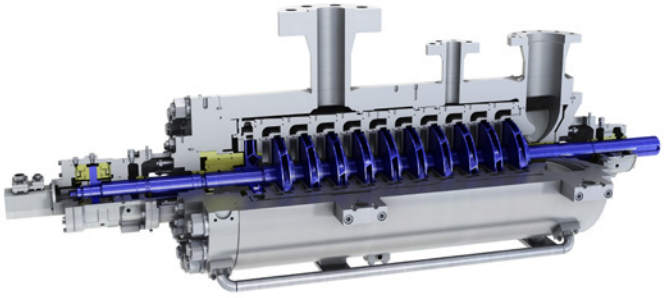

Key characteristics

Capacities	up to 1’000 m^3/h / 5’300 USgpm
Heads	up to 2’800 m / 10’500 ft.
Pressures	up to 350 bar / 5’080 psi
Temperatures	up to 210°C / 410°F

Applications
- Feedwater pump
- Nuclear safety services

GVG diffuser style barrel pump



Features and benefits
- Low thrust bearing loads due to opposed impellers (even with worn clearances)
- Excellent rotordynamic behavior because of center bushing
- Forged barrel in chromium steel/austenic stainless steel
- Full cartridge design to reduce downtime during maintenance
- Double suction impeller at first stage (optional)

Key characteristics

Capacities	up to 65 m^3/h / 285 USgpm
Heads	up to 1’900 m / 6’230 ft.
Pressures	up to 200 bar / 2’900 psi
Temperatures	up to 100ºC / 212ºF

Applications
- Control rod drive pump
- High pressure charging pump
- Make up water pump
- Safety related services for NPP

HPT high pressure barrel pump

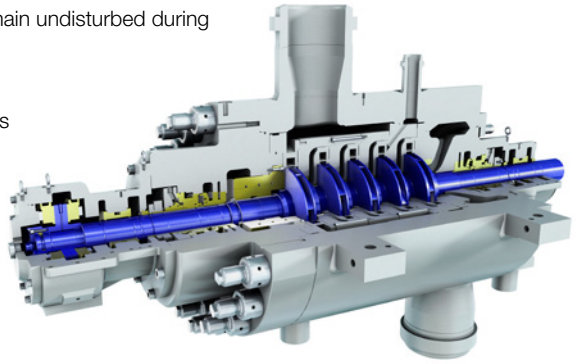

Features and benefits
- Maximum safety due to double casing design; pipework connections remain undisturbed during disassembly
- High strength barrel material to accept thermal shock
- Full cartridge pull out for rapid changeover
- Design features to eliminate the need for pre-warming in most installations
- Long operating life regardless of the operating mode

Key characteristics

Capacities	up to 5’500 m^3/h / 24’200 USgpm
Heads	up to 5’000 m / 16’400 ft.
Pressures	up to 650 bar / 9’430 psi
Temperatures	up to 260ºC / 500ºF

Applications
- Boiler feedwater

HPcp high pressure, radially-split, multistage barrel pump ISO 13709 / API 610 type BB5

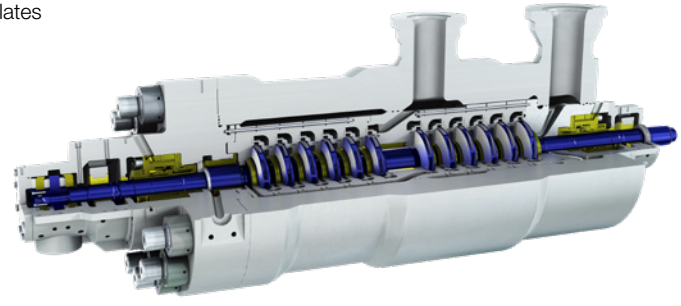

Features and benefits
- Inline or back-to-back rotor stack designs for rotordynamic stability
- Forged carbon steel, duplex SS, HIP’s and overlaid barrel construction
- Twistlock or bolted barrel closure with Superbolts™
- Sleeve, pocketed, or tilt pad bearings
- Grouted, ungrouted and offshore 3- or 4-point support baseplates

Key characteristics

Capacities	up to 4’000 m^3/h / 20’000 USgpm
Heads	up to 10’200 m / 33’500 ft.
Pressures	up to 1’100 bar / 16’000 psi
Temperatures	up to 200°C / 400°F

Applications
- Ultra high pressure water injection
- Offshore crude oil shipping
- Remote pipeline services
- High pressure waterflood

Radially-split, multistage, ring section pumps

MBN medium pressure stage casing pump

Features and benefits
- Simple construction to minimize dimensions and reduce investment and maintenance costs
- High quality investment cast impellers and diffusers for better efficiency
- Fast and easy impeller mounting
- Bearing unit can be serviced without disassembling the pumps
- Wide range of materials including duplex stainless-steel grades

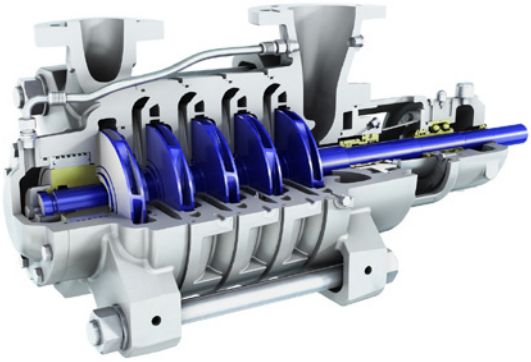

Key characteristics

Capacities	up to 700 m^3/h / 3'080 USgpm
Heads	up to 900 m / 2'950 ft.
Pressures	up to 100 bar / 1'450 psi
Temperatures	up to 180°C / 355°F

Applications
- Feedwater pump
- Desalination
- Auxiliary services
- District heating

MBN-RO multistage stage casing pump

Features and benefits
- Top of its class efficiency to ensure lowest specific power consumption per produced cubic meter of water in desalination applications
- Different hydraulics can be fitted in the same pump frame allowing flexibility, modularity, and future retrofitting
- All parts typically subject to maintenance (both drive end (DE) and non-drive end (NDE)bearings, balancing disk, mechanical seal) are accessible and can be replaced on site, without removal of suction and discharge piping

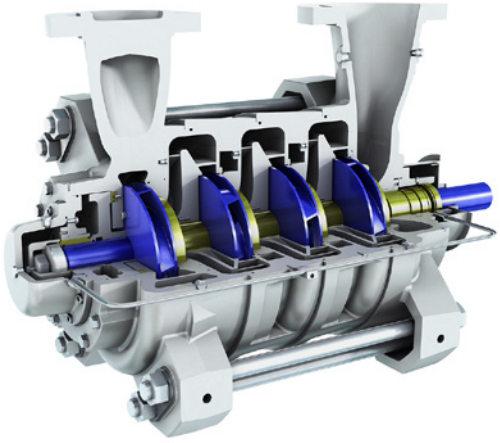

Key characteristics

Capacities	up to 1'100 m^3/h / 4'800 USgpm
Heads	up to 900 m / 2'950 ft.
Pressures	up to 100 bar / 1'450 psi
Temperatures	up to 90°C / 194°F

Applications
- High pressure membrane feed in seawater reverse osmosis (SWRO)
- Clean water pumping stations
- Any other high pressure application with clean liquids and low temperature

MC high pressure stage casing pump

Features and benefits
- Modular hydraulics for high efficiency in a wide range of operating conditions
- Large branch sizes for optimized inlet flow, low noise level and higher allowable forces and moments
- Unaffected by rapid temperature variations
- Easy access for cleaning to the seal cooling chambers
- Stiff shaft design for critical speeds above the maximum operating speed
- Low pressure version with dedicated large sizes for condensate extraction service

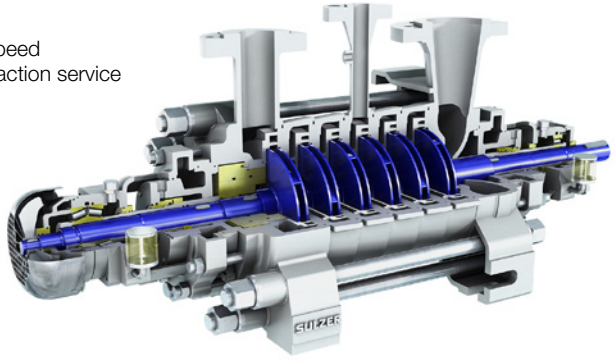

Key characteristics

Capacities	up to 1'700 m^3/h / 8'500 USgpm
Heads	up to 1'750 m / 5'500 ft.
Pressures	up to 180 bar / 2'610 psi
Temperatures	up to 180°C / 355°F

Applications
- Feedwater pump
- Fuel injection and NOx abatement
- Condensate extraction

MD high pressure stage casing pump

Features and benefits

- Modular hydraulics for high efficiency in a wide range of operating conditions
- Centerline mounted with large branch sizes for optimized inlet flow, low noise level and higher allowable forces and moments
- Unaffected by rapid temperature variations
- Stiff shaft design for critical speeds above the maximum operating speed
- Multiple screws mechanical tensioners are used on large sizes to allow simpler tightening and loosening

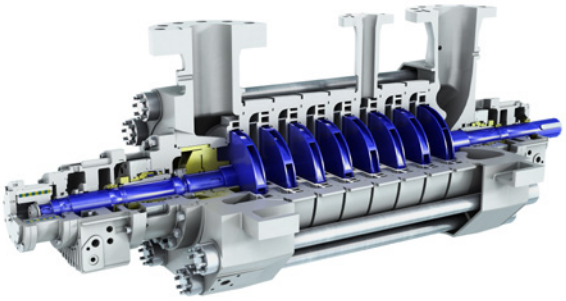

Key characteristics

Capacities	up to 1’200 m^3/h / 5’300 USgpm
Heads	up to 2’800 m / 9’200 ft.
Pressures	up to 350 bar / 5’080 psi
Temperatures	up to 210°C / 410°F (higher temperatures upon request)

Applications

- Feedwater pump

VMS vertical multistage pump

Features and benefits

- Unique hydraulic design gives an efficiency of up to 80%
- Low NPSHr for vibration-free operation and extended life span
- Durable solution with high quality materials
- Suitable for drinking water with ACS, WRAS and NSF certification



Key characteristics

Capacities	up to 162 m^3/h / 850 USgpm
Heads	up to 400 m / 1’350 ft.
Pressures	up to 40 bar / 580 psi
Temperatures	from -20ºC to 140ºC / -4ºF to 284ºF

Applications

- Municipal water supply and distribution
- Domestic water supply
- Cooling water transport
- Hot water applications
- Fire fighting

Radially-split, one/two stage, pumps

CD radially-split, single stage pump ISO 13709 / API 610 type BB2

Features and benefits
- Centerline support for reduced, thermally induced misalignment
- Double suction impeller for low Net Positive Suction Head Required (NPSH3)
- Casing designed for two times API 610 nozzle loads for freedom from piping distortions
- Optional inline side/side or side suction/top discharge configuration
- Engineered CD design for special applications

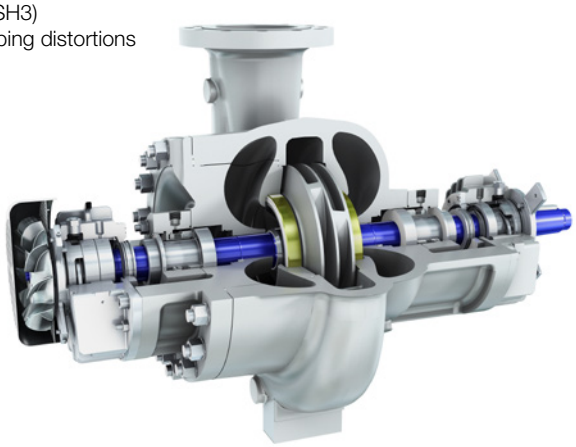

Key characteristics

Capacities	up to 7'000 m^3/h / 30'000 USgpm
Heads	up to 450 m / 1'500 ft.
Pressures	up to 51 bar / 740 psi
Temperatures	up to 425°C / 800°F

Applications
- Medium pressure pipeline
- Refinery pump around
- Refinery bottoms
- Petrochemical quench water

BBT and BBTD radially-split, two stage pumps ISO 13709 / API 610 type BB2

Features and benefits
- Two stage configuration for higher heads
- Option of single or double suction first stage impeller to suit NPSHa
- First critical speed is well above operating speed range for smooth operation
- Casing designed for two times API 610 nozzle loads for freedom from piping distortions
- Special low flow high head hydraulics

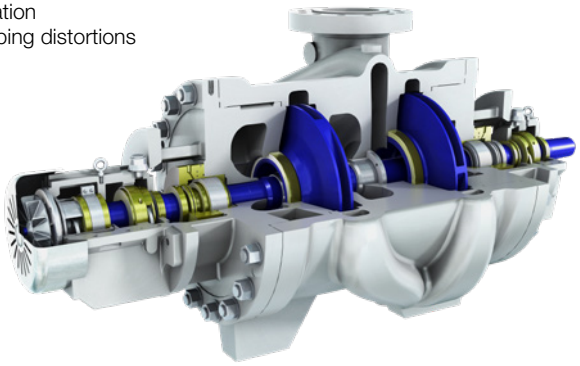

Key characteristics

Capacities	up to 2'300 m^3/h / 10'000 USgpm
Heads	up to 760 m / 2'500 ft.
Pressures	up to 100 bar / 1'450 psi
Temperatures	up to 425°C / 800°F

Applications
- Refinery vacuum bottoms
- Refinery coker heater charge
- Offshore WIP boosting

HPTd double suction, single stage pump

Features and benefits
- Robust design to accept high piping loads
- Single cover design to reduce overhaul times
- Split bearing housings allow for bearing inspection without pump disassembly
- Single mechanical seal provides higher efficiency

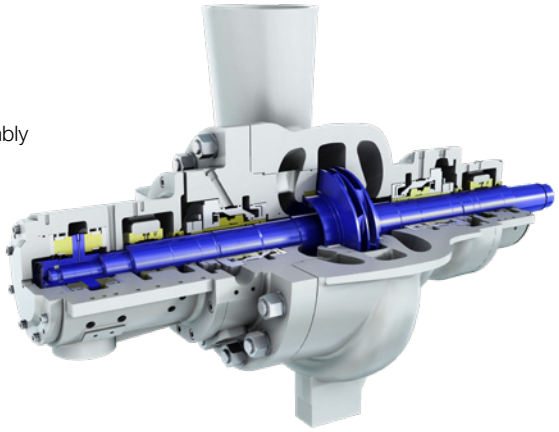

Key characteristics

Capacities	up to 5'000 m^3/h / 22'000 USgpm
Heads	up to 800 m / 2'625 ft.
Pressures	up to 150 bar / 2'175 psi
Temperatures	up to 220ºC / 428ºF

Applications
- Feedwater in nuclear power plants

HZB double suction volute pump

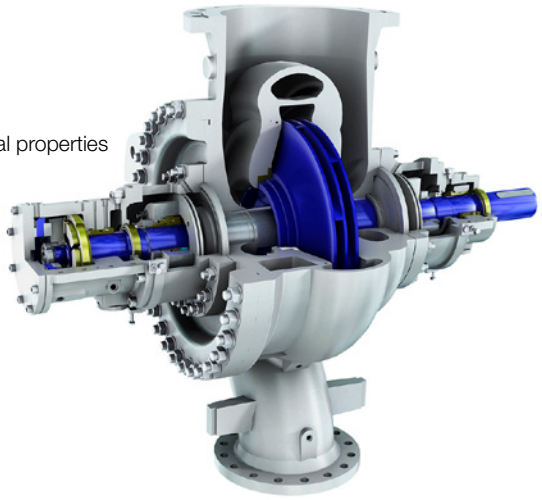

Features and benefits
- Centerline mounting to allow free thermal expansion and high nozzle loads
- Minimum bearing span to minimize shaft deflection
- Single cover casing design to reduce overhaul times
- Chrome steel casing with good corrosion resistance and excellent mechanical properties is standard
- Single mechanical seal provides higher efficiency

Key characteristics

Capacities	up to 5’500 m^3/h / 29’000 USgpm
Heads	up to 340 m / 1’115 ft.
Pressures	up to 48 bar / 700 psi
Temperatures	up to 220ºC / 428ºF

Applications
- Feedwater booster
- Nuclear safety services
- District heating

HZB-HTF double suction volute pump

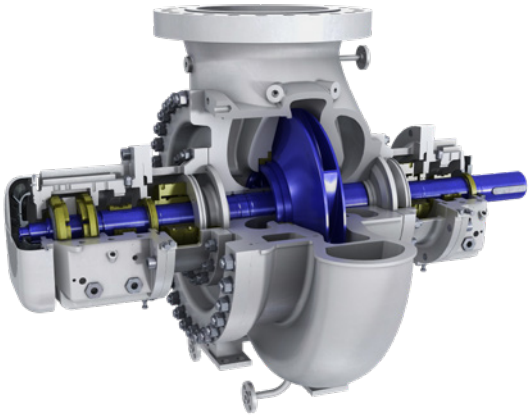

Features and benefits
- Centerline mounting to allow free thermal expansion and high nozzle loads
- Minimum bearing span to minimize shaft deflection
- Single cover casing design to reduce overhaul times
- Carbon steel or chrome steel casing with excellent mechanical properties
- Double mechanical seal provides safer operation

Key characteristics

Capacities	up to 4’400 m^3/h / 17’600 USgpm
Heads	up to 400 m / 1’310 ft.
Pressures	up to 48 bar / 700 psi
Temperatures	up to 425ºC / 800ºF

Applications
- HTF oil pump for CSP

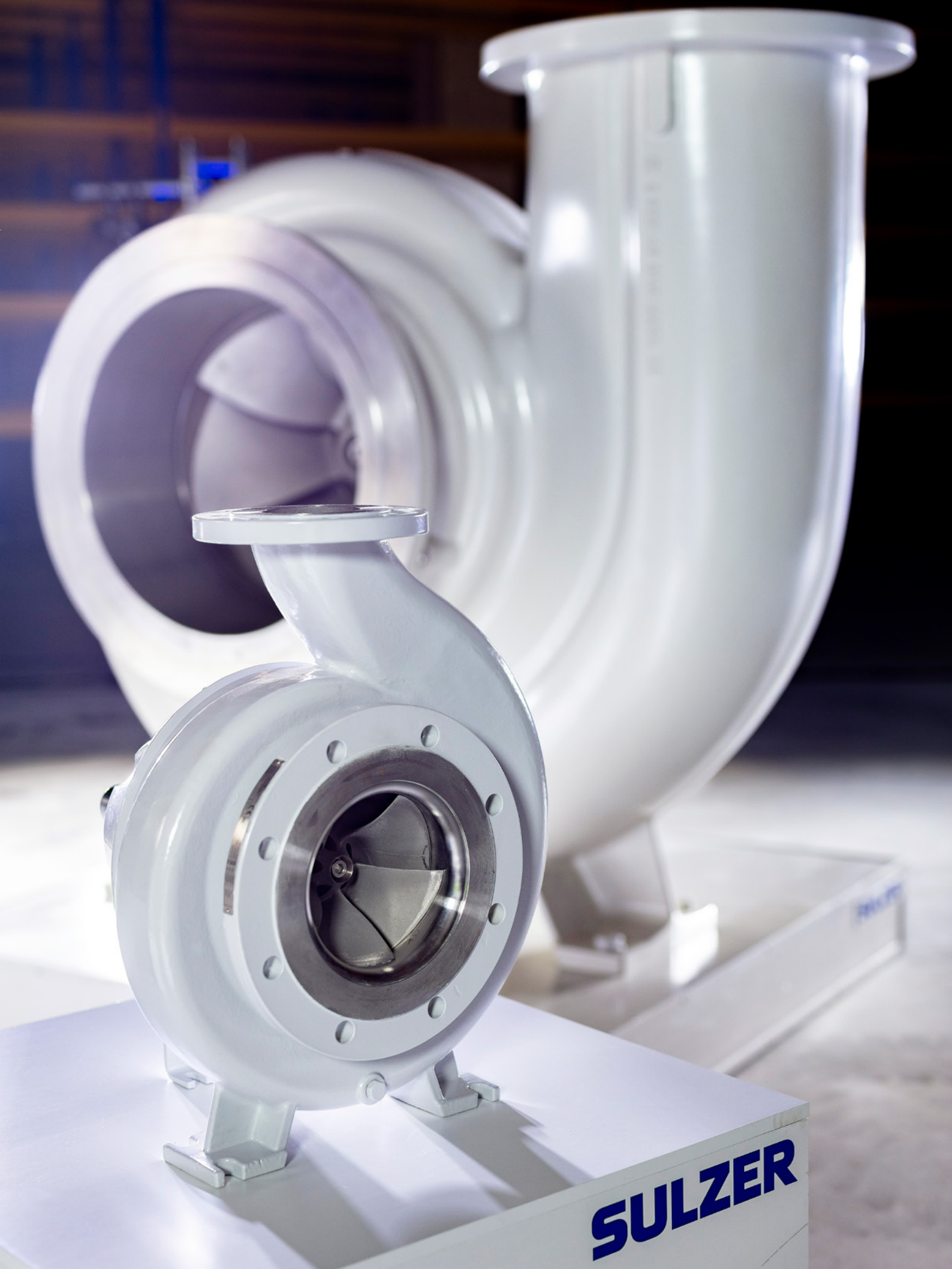
SULZER

Single-stage, end-suction/overhung pumps

AHLSTAR pumps

Features and benefits
- AHLSTAR pumps save energy, sealing water and the environment
- Designed to meet the EN ISO 5199 standard, these pumps also comply to EN 22858 (ISO 2858) standard
- The modular interchangeability of parts and components enables low spare parts inventory
- The pump range offers the lowest total cost shaft seal concept, with dynamic seal, mechanical seals and packing
- Every AHLSTAR is designed for fast and easy installation, maintenance and service
- ACS drinking water certification
- Food contact materials certificate (EC) 1935

AHLSTAR A, APT

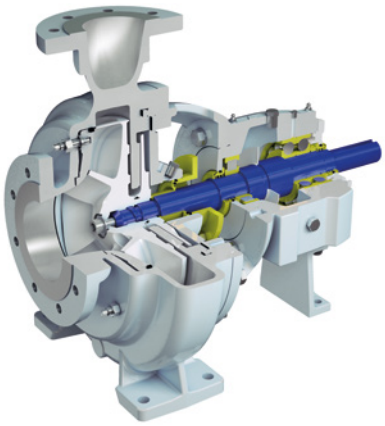

Key characteristics

Capacities	up to 11'000 m^3/h / 48'400 USgpm
Heads	up to 160 m / 525 ft.
Pressures	up to 16 / 25 bar, 230 / 360 psi, depending on material and size
Temperatures	up to 180°C / 356°F

Applications
- Clean and slightly contaminated liquids
- Viscous liquids
- Fibrous slurries
- Solids containing liquids
- Gas containing liquids and self-priming applications
- Various demanding applications

AHLSTAR NPP/T



Key characteristics

Capacities	up to 2'000 m^3/h / 8'800 USgpm
Heads	up to 90 m / 295 ft.
Pressures	up to 16 bar / 230 psi, depending on material and size
Temperatures	up to 180°C / 356°F

Applications
- Large solids containing liquids and fibrous slurries
- Large solids and gas containing liquids and slurries including self-priming applications

AHLSTAR WPP/T

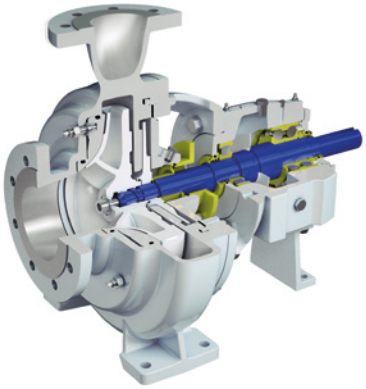

Key characteristics

Capacities	up to 7'000 m^3/h / 31'000 USgpm
Heads	up to 110 m / 360 ft.
Pressures	up to 16 bar / 230 psi, depending on material and size
Temperatures	up to 180°C / 356°F

Applications
- Abrasive and viscous liquids, fibrous and non-fibrous slurries
- Abrasive solids and gas containing liquids and slurries including self-priming applications

AHLSTAR EPP/T

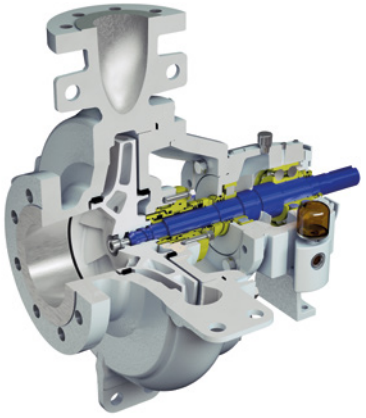

Key characteristics

Capacities	up to 6’100 m^3/h / 26’860 USgpm
Heads	up to 160 m / 525 ft.
Pressures	up to 25 bar / 360 psi, depending on material and size
Temperatures	up to 210°C / 410°F

Applications

- High temperature liquids
- Clean and slightly contaminated liquids
- Viscous liquids
- Fibrous slurries

A-RO end-suction pump



Features and benefits

- Industry-leading efficiency for reduced operating costs
- High-quality materials for enhanced durability
- Tailored design for desalination applications
- Suitable for 50 Hz and 60 Hz grid frequency

Key characteristics

Capacities	up to 6’000 m^3/h / 26’415 USgpm
Heads	up to 200 m / 600 ft.
Pressures	up to 25 bar / 360 psi
Temperatures	up to 39°C / 102°F

Applications

- Low-pressure booster pump to RO high-pressure membrane feed
- RO second pass membrane feed
- Process applications in desalination plants

CPE ANSI process pumps range ANSI / ASME B73.1

Features and benefits

- The highest available efficiency on the ANSI process pump market providing clear savings in energy consumption
- Exceeds the requirements of all environmental (ECO) directives and the global energy efficiency targets for pumps
- Maximized reliability thanks to shaft sealing conditions and heavy-duty bearing unit
- High standardization, easy installation and robust construction equate to reduced maintenance and operating costs
- The CPE pump uses NSF61 and NSF372 certified materials

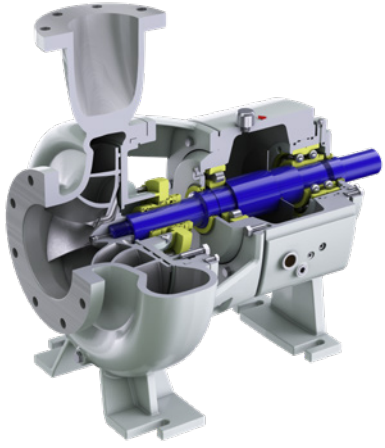

Key characteristics

Capacities	up to 1’650 m^3/h / 7’000 USgpm
Heads	up to 275 m / 900 ft.
Pressures	up to 27.5 bar / 400 psi
Temperatures	up to 260°C / 500°F

Applications

- Clean and slightly contaminated liquids
- Viscous liquids
- Fibrous slurries

EMTECH pump

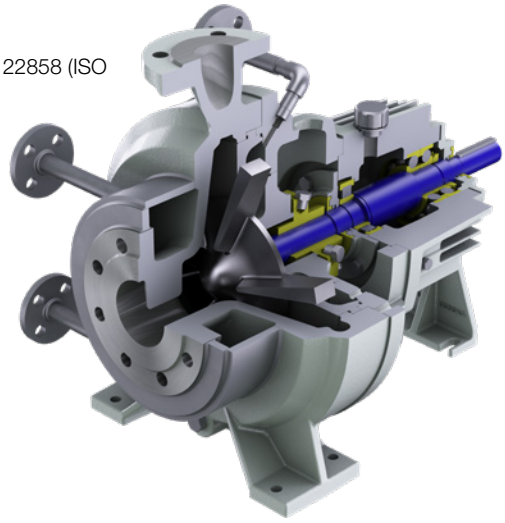

Features and benefits
- Designed to meet the EN ISO 5199 standard, these pumps also comply with EN 22858 (ISO 2858) standard for Chemical industry applications
- High efficiency
- Low net positive suction head (NPSH)
- Reliable and flexible design to ensure maximum installation availability
- Low energy consumption, high standardization, easy installation and unique design reduce maintenance and operating costs
- Heating / cooling jacket
- Available in special materials such as hastelloy, nickel, titanium, etc., upon request

Key characteristics

Capacities	up to 350 m^3/h / 1’540 USgpm
Heads	up to 160 m / 525 ft.
Pressures	up to 20 bar / 290 psi
Temperatures	up to 180ºC / 356ºF

Applications
- Clean and slightly contaminated liquids
- Viscous liquids, sticky liquids
- Fibrous slurries

Dry-installed sewage pump type ABS FR



Features and benefits
- Very service-friendly due to back pull-out design using standard electrical motors
- Ample space inside the impeller and volute, making them less prone to clogging
- Dry running capability possible with a double seal arrangement
- Can be supplied with optional equipment where self-priming is required

Key characteristics

Discharge sizes	DN150-DN700 / 6-28”
Motor range	up to 700 kW / up to 950 hp
Bearing life	100’000 h

Applications
- Clear water
- Polluted water
- Heavily polluted sewage containing solids, fecal slurry, and sludge in commercial, industrial and municipal applications

NRN high-pressure process pump



Features and benefits
- Designed for heavy-duty applications in various industries
- Exceeds the requirements of ISO 5199, type OH1
- Tailor-made for your process needs
- High reliability and maximum efficiency

Key characteristics

Capacities	up to 4’500 m^3/h / 19’800 USgpm
Heads	up to 320 m / 1’050 ft.
Pressures	up to 50 bar / 1’100 psi
Temperatures	from -90 to 180°C / from -130 to 356°F

Applications
- Clean and slightly contaminated liquids
- Corrosive and abrasive liquids
- Slurry applications

OHH and OHHL overhung, single stage pumps ISO 13709 / API 610 type OH2

Features and benefits
- Finned bearing housing and fan cooling for long bearing life
- Broadest range map in the industry for ISO 13709 (API 610) type OH2 pumps
- Heavy duty baseplates with 2x ISO 13709 (API 610) nozzle load option
- ISO 21049 (API 682) cartridge type mechanical seals for reduced emissions
- Electric motor, variable frequency drive (VFD), engine and steam turbine drivers

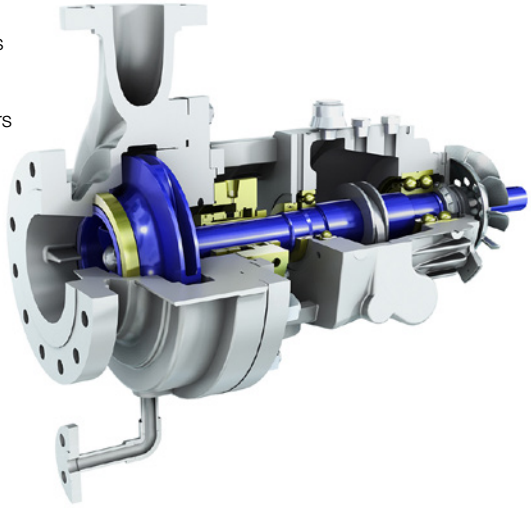

Key characteristics

Capacities	up to 2’250 m^3/h / 10’000 USgpm
Heads	up to 400 m / 1’500 ft.
Pressures	up to 75 bar / 1’110 psi
Temperatures	up to 425°C / 800°F

Applications
- Offshore boosting
- Refinery and petrochemical process applications
- HTF oil circulation

OHV and OHVL overhung, vertical inline pumps ISO 13709 / API 610 type OH3

Features and benefits
- Finned bearing housing and fan cooling for long bearing life
- Broad range map for hydraulic coverage
- Heavy-duty pump and driver stand for reduced vibration
- ISO 21049 (API 682) cartridge type mechanical seals for reduced emissions
- OHH/OHHL shaft and bearings for reduced deflection and long seal life

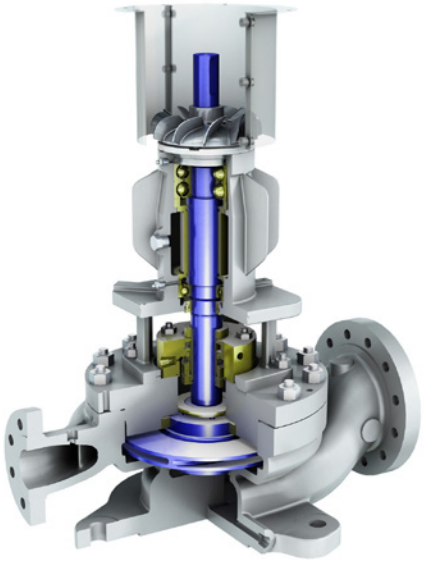

Key characteristics

Capacities	up to 1’450 m^3/h / 6’800 USgpm
Heads	up to 450 m / 1’500 ft.
Pressures	up to 51 bar / 740 psi
Temperatures	-160 to +340°C / -256 to +650°F

Applications
- Seawater booster
- Light hydrocarbon boosting
- Low-pressure unit charge
- Pump around services
- Tank farm boosting

PRE and PRELF end suction, single stage process pumps ISO 13709 / API 610 type OH2

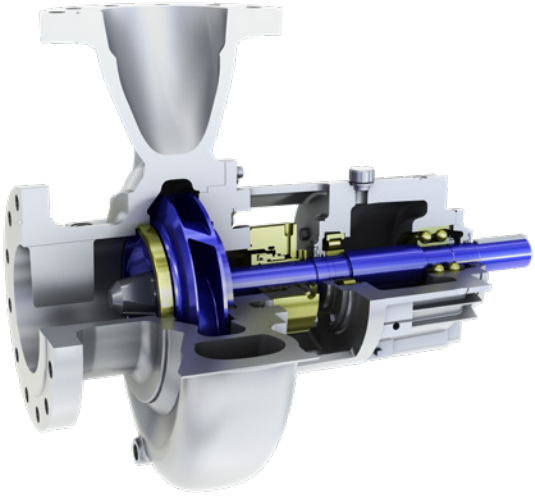

Features and benefits
- Heavy duty shaft with short overhang dimensions for robust design
- Closed, semi-open and open impeller design options to suit process fluid
- ISO 21049 (API 682) cartridge type mechanical seals for reduced emissions
- Inducer option for low NPSH applications
- Available in special alloys such as S-9, 625, 825, hastelloy and titanium

Key characteristics

Capacities	up to 4’500 m^3/h / 19’800 USgpm
Heads	up to 320 m / 1’050 ft.
Pressures	up to 51 bar / 740 psi, special high pressure 250 bar upon request
Temperatures	up to 400°C / 750°F

Applications
- Boosting
- Refinery, petrochemical and chemical process applications
- Desalination
- Boiler feedwater booster
- Condensate extraction
- HTF oil circulation

PRER and PRETR high pressure pumps

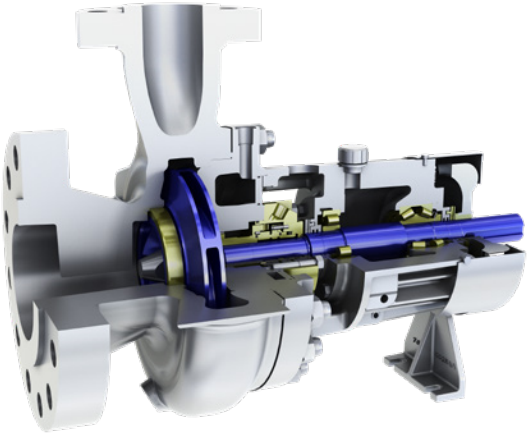

Features and benefits
- High pressure casing design with special reinforcement to suite challenging high-pressure services
- Closed impeller for clean liquids
- Extra heavy duty, large diameter shaft
- Taper roller bearing for very high suction pressures
- Robust bearing housing with low noise fan for high temperatures

Key characteristics

Capacities	up to 2’200 m^3/h / 8’800 USgpm
Heads	up to 320 m / 1’050 ft.
Pressures	up to 200 bar / 2’900 psi
Temperatures	up to 400°C / 752°F

Applications
- Boiler circulation pump
- Hot water circulation pump

PRF high-pressure booster pump

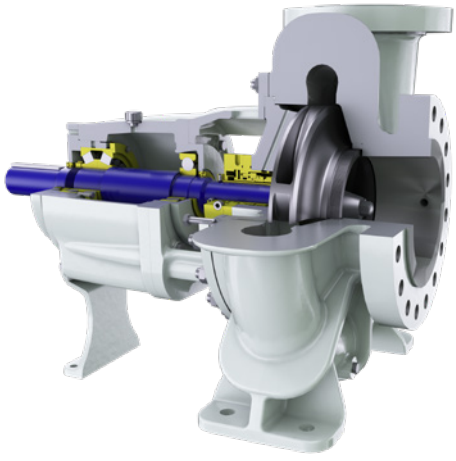

Features and benefits
- Specifically designed to manage clear liquids with high suction pressure
- Optimized design ensures maximum pressure resistance and extended lifetime
- Cost effective and highly reliable
- Efficient solution as ERS booster pumps in SWRO desalination applications

Key characteristics

Capacities	up to 1’350 m^3/h / 7’250 USgpm
Heads	up to 95 m / 445 ft.
Pressures	up to 75 bar / 1’090 psi
Temperatures	up to 200°C / 392°F

Applications
- Reverse osmosis process
- Boiler circulation
- Any high-pressure process application

REL horizontal diffuser style single stage pump

Features and benefits
- Casing designed for higher nozzle loads to comply with nuclear requirements
- Proven hydraulic design from our API 610 pump range ZE/ZF
- Enlarged shaft diameter compared to API 610 to match nuclear requirements
- Low rotor bending
- High dry running critical speed
- Designs according to RCC-M available

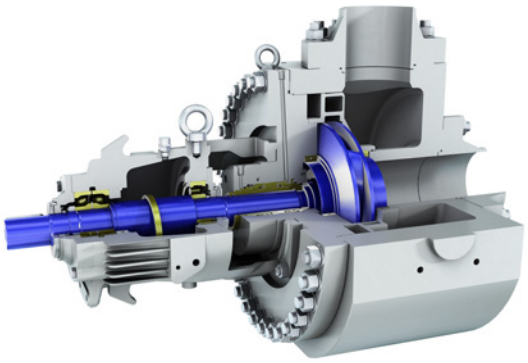

Key characteristics

Capacities	up to 2’600 m^3/h / 11’440 USgpm
Heads	up to 300 m / 1’000 ft.
Pressures	up to 100 bar / 1’450 psi
Temperatures	up to 425°C / 800°F

Applications
- Safety related services

End-suction EN733 centrifugal pumps SES and SKS

Features and benefits
- Suitable for drinking water with ACS certification
- Reliable operation even in high-pressure applications
- Easy maintenance with “back pull-out” design
- Heavy-duty construction for continuous operation
- Maintenance-free bearings for increased service life
- Free position of SKS with horizontal, sloping or vertical axis to meet any installation needs

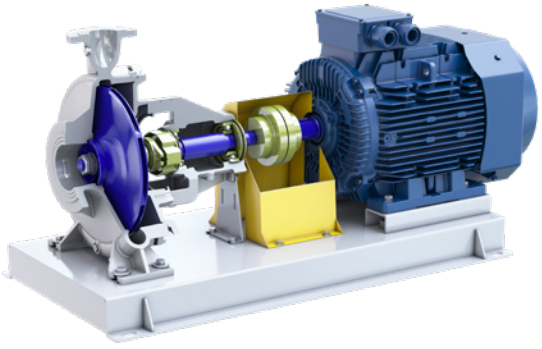

Key characteristics

Capacities	SES up to 2’000 m^3/h / 2’700 USgpm
	SKS up to 825 m^3/h / 3’522 USgpm
Heads	SES up to 130 m / 394 ft.
	SKS up to 129 m / 374 ft.
Temperatures	SES/SKS -15ºC / +90°C / +5ºF / +194ºF

Applications
- Water supply facilities
- Water distribution networks
- Irrigation
- Heating and cooling systems
- General industry applications

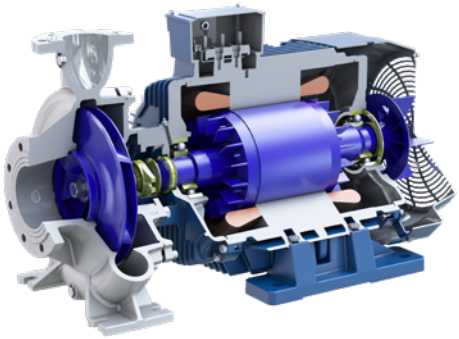

SIL inline pump range

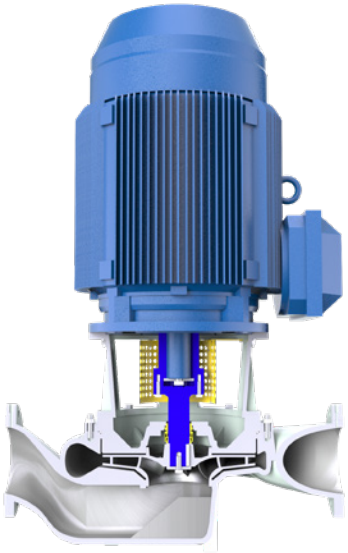

Features and benefits
- Premium efficiency over a wide operation range
- Exceeds ErP (energy-related products) minimum efficiency index (MEI 0.4)
- Low installation and maintenance costs due to easy installation and unique design
- Low spare parts costs due to high standardization

Key characteristics

Capacities	up to 720 m^3/h / 3’200 USgpm
Heads	up to 100 m / 328 ft.
Pressures	up to 16 bar / 230 psi
Temperatures	up to 180°C / 356°F

Applications
- Clean and slightly contaminated liquids
- Clean viscous liquids
- Clean fibrous slurries

SNS range

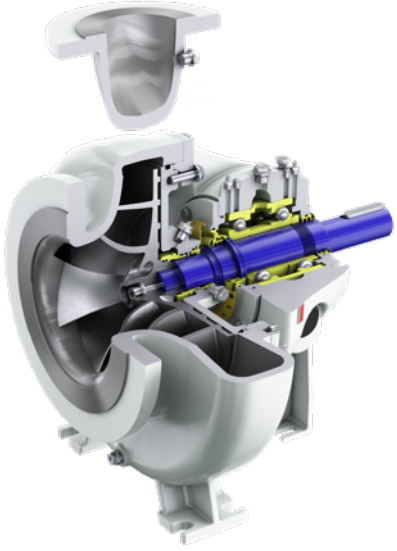

Features and benefits
- Designed to meet the design requirements of EN 5199 international standard
- Exceeding EU’s (European Union) requirements for energy-related products (ErP)
- Highest efficiency across the whole pump range, exceeding the benchmark efficiency index MEI 0.7 (minimum efficiency index)
- State-of-the-art hydraulics ensure optimum capacity with low net positive suction head required (NPSHr)
- Low energy consumption, high standardization, easy installation and unique construction also equate to lower maintenance and operating costs
- ACS drinking water certification
- Food contact materials certificate (EC) 1935

Key characteristics

Capacities	up to 1’400 m^3/h / 6’000 USgpm
Heads	up to 160 m / 525 ft.
Pressures	up to 16 bar / 230 psi
Temperatures	up to 120°C / 250°F

Applications
- Clean and slightly contaminated liquids
- Viscous liquids
- Fibrous slurries

VMOA transformer oil circulation centrifugal pump

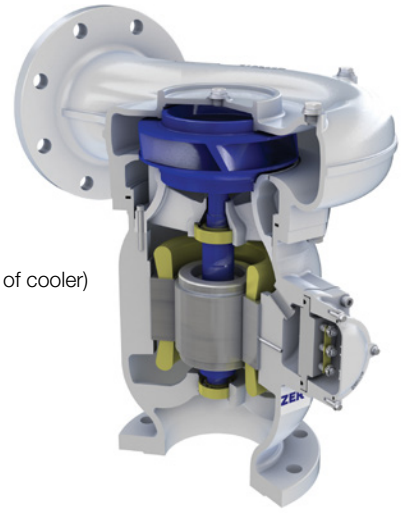

Features and benefits
- High efficiency
- Cooled and lubricated by the transformer oil
- Low noise and vibration levels
- Quick and easy installation, safe operation, maintenance free
- Reliable ball bearing design superior to other bearing types
- No need for bearing surveillance equipment
- Integrated motor with high thermal margin
- Extremely long lifetime
- Suitable as a cooling pump for all transformers (not exclusive to any particular manufacturer of cooler)

Key characteristics

Capacities	5-65 l/s / 79-1'030 gpm
Heads	200 kPa
Temperature	-40°C to 100°C / -40°F to 212°F
Pressure	10 bar
Flanges	ISO PN6 / PN10 / ANSI 125 FF

Applications
- Dielectric transformer oil

ZA / ZE and ZF end suction pumps ISO 13709 / API 610 type OH2

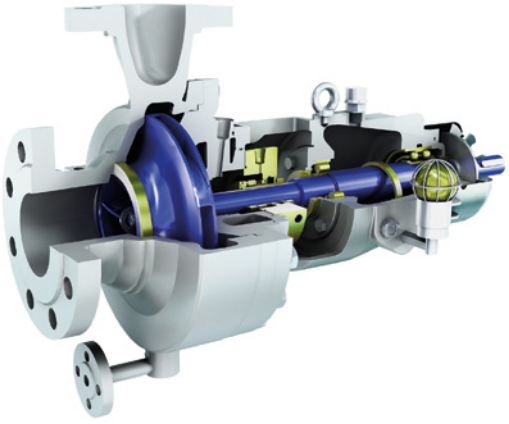

Features and benefits
- Designed for hot and cold process applications
- Modular construction to provide maximum interchangeability

Key characteristics

Capacities	up to 2'600 m^3/h / 11'440 USgpm
Heads	up to 300 m / 1'000 ft.
Pressures	up to 100 bar / 1'450 psi
Temperatures	up to 425°C / 800°F

Applications
- Refinery, petrochemical and chemical process applications
- Desalination
- Boiler feedwater booster
- Condensate extraction
- HTF oil circulation
- Auxiliary services
- District heating

ZF-RO end suction pump

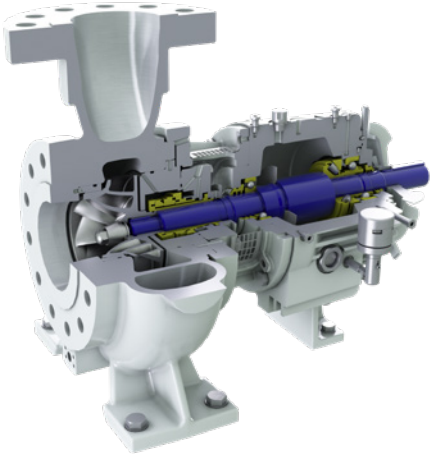

Features and benefits
- Industry-leading efficiency for reduced energy consumption
- Wide operational envelope via VFD enables high-efficiency performance across a wide range of heads and flow rates
- Reinforced mechanical design to meet the demanding process specifications for booster ERD pump
- Heavy-duty thrust bearings suitable for high suction pressure

Key characteristics

Capacities	up to 2'600 m^3/h / 11'450 USgpm
Heads	up to 70 m / 230 ft.
Pressures	up to 100 bar / 1'450 psi
Temperatures	up to 60°C / 140°F

Applications
- Booster pump for energy recovery devices (ERD)

ZFn horizontal volute type process pump

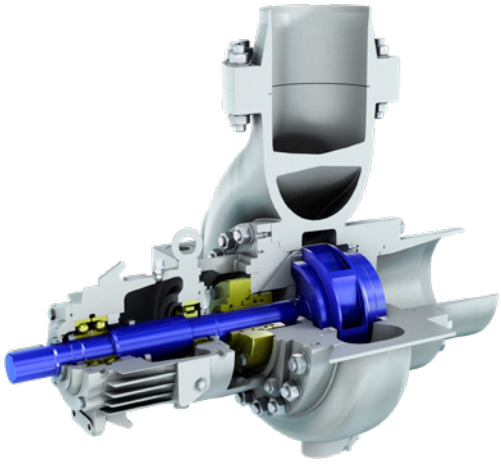

Features and benefits
- Basic design according API 610 latest edition
- Casing designed for higher nozzle loads to comply with nuclear requirements
- Proven hydraulic design from our API 610 pump range ZE/ZF
- Enlarged shaft diameter compared to API 610 to match nuclear requirements
- Low rotor bending
- High dry running critical speed
- Designs according to RCC-M available

Key characteristics

Capacities	up to 2'600 m^3/h / 11'440 USgpm
Heads	up to 300 m / 1'000 ft.
Pressures	up to 100 bar / 1'450 psi
Temperatures	up to 425°C / 800°F

Applications
- Safety related services

Submersible pumps

Submersible sewage pumps type ABS XFP



Features and benefits
- Premium Efficiency IE3 motor in accordance with IEC 60034-30
- Excellent rag handling
- Specially designed impellers for reliable delivery of wastewater containing solids and fibrous material
- Hazardous locations: Approval for ATEX (Ex II 2G Ex h db IIB T4 Gb), FM and CSA available
- Quick and easy installation, safe operation, easy maintenance and service

Key characteristics

Capacities	up to 2'700 l/s (50 Hz) / 3'000 l/s / 47'560 USgpm (60 Hz)
Heads	up to 80 m (50 Hz) / 95 m / 310 ft. (60 Hz)
Temperatures	up to 40ºC / 104ºF
Motor power	up to 550 kW (50 Hz) / up to 620 kW / 830 hp (60 Hz)

Applications
- Sewage with sludge and rag content
- Sewage containing solids and fibrous material
- Municipal combined sewage and storm water systems
- Seawater (stainless-steel version only)

Submersible sewage pumps type ABS CFP



Features and benefits
- Excellent rag handling
- Specially designed impellers for reliable delivery of wastewater containing solids and fibrous material
- Premium mechanical reliability. Same as per XFP PE design
- Quick and easy installation, safe operation, easy maintenance and service

Key characteristics

Capacities	up to 800 l/s (50 Hz)
Heads	up to 60 m (50 Hz)
Temperatures	up to 40ºC / 104ºF
Motor power	up to 137 kW (50 Hz)

Applications
- Clean water and wastewater
- Sewage with sludge and rag content
- Sewage containing solids and fibrous material
- Industrial raw water
- Municipal combined sewage and storm water systems

Submersible mixed flow column pump type ABS AFLX



Features and benefits
- Premium Efficiency IE3 motor in accordance with IEC 60034-30
- Highly efficient three-to five-blade open-type mixed flow impellers
- Low-vibration design and low-NPSH design
- Automatic self-centering of the pump and column pipe with a conical coupling ring
- Hazardous locations: Certification for ATEX (Ex II 2G Ex h db IIB T4 Gb), FM and CSA available as an option

Key characteristics

Capacities	up to 3’100 l/s / 49’000 USgpm
Heads	up to 35 m (50 Hz) / 33 m / 108 ft. (60 Hz)
Temperatures	up to 40ºC / 104ºF
Motor power	up to 500 kW (50 Hz) / up to 468 kW / 628 hp (60 Hz)

Applications
- Storm water protection, irrigation and aquaculture
- Industrial raw water and process water
- Combined sewage and surface water
- Recirculation sludge or return activated sludge (RAS)

Submersible mixed flow column pump type ABS AFLC



Features and benefits
- Highly efficient three-to five-blade open-type mixed flow impellers
- Low-vibration design and low-NPSH design
- Automatic self-centering of the pump and column pipe with a conical coupling ring

Key characteristics

Capacities	up to 1’400 l/s
Heads	up to 318 m (50 Hz) / 33 m
Temperatures	up to 40ºC / 104ºF
Motor power	up to 129 kW (50 Hz)

Applications
- Storm water protection, irrigation and aquaculture
- Industrial raw water and process water
- Combined sewage and surface water
- Recirculation sludge or return activated sludge (RAS)
- Hazardous locations

Submersible propeller pump type ABS VUPX



Features and benefits
- Premium Efficiency IE3 motor in accordance with IEC 60034-30
- Versatile range of axial-flow propellers
- Low-vibration design and Low-NPSH design
- Automatic self-centering of the pump and column pipe with a conical coupling ring
- Hazardous locations: certification for ATEX (Ex II 2G Ex h db IIB T4 Gb), FM and CSA available as an option

Key characteristics

Capacities	up to 7'000 l/s (50 Hz) / 8'500 l/s / 134'700 USgpm (60 Hz)
Heads	up to 10 m / 33 ft.
Temperatures	up to 40ºC / 104ºF
Motor power	up to 650 kW (50 Hz) / up to 750 kW / 1'005 hp (60 Hz)

Applications
- Storm water protection, irrigation and aquaculture
- Industrial raw water and process water
- Combined sewage and surface water
- Recirculation sludge or return activated sludge (RAS)

Submersible propeller pump type ABS VUPC



Features and benefits
- Versatile range of axial-flow propellers
- Low-vibration design and Low-NPSH design
- Automatic self-centering of the pump and column pipe with a conical coupling ring

Key characteristics

Capacities	up to 2'700 l/s (50 Hz)
Heads	up to 10 m / 33 ft.
Temperatures	up to 40ºC / 104ºF
Motor power	up to 650 kW (50 Hz)

Applications
- Storm water protection, irrigation and aquaculture
- Industrial raw water and process water
- Combined sewage and surface water
- Recirculation sludge or return activated sludge (RAS)
- Hazardous locations

Submersible wastewater pump type ABS AS



Features and benefits
- Hydraulic design with Contrablock system or vortex impellers
- Two- and four-pole design
- Passage of solids from 40 to 80 mm
- Automatic coupling system

Key characteristics

Capacities	up to 110 m^3/h / 528 USgpm
Heads	up to 28 m / 115 ft.
Temperatures	40°C up to 60°C (max. 5 minutes) / 104°F up to 140°F (max. 5 minutes)
Motor power	1.2 to 3.0 kW / 1.8 to 3.5 kW / 1.61 to 4.02 hp / 2.41 to 4.69 hp

Applications
- Sewage and wastewater with toilet waste
- Two-inch version especially suitable for pumping wastewater from underground garages
- Vortex hydraulics
- Particularly suitable for fluids containing fibrous or abrasive matter
- Contrablock hydraulic system for larger proportions of solid or fibrous matter

Light drainage pump type ABS Coronada



Features and benefits
- Fitted with automatic level control
- Supplied with built-in check valve
- Coronada SX available with a high-grade, stainless steel shaft, Viton seals, and PVC cable

Key characteristics

Capacities	up to 9 m^3/h
Heads	up to 7 m
Temperatures	40°C up to 60°C (max. 5 minutes)
Motor power	0.3 kW

Applications
- Wastewater without toilet waste
- Drainage of pits, swimming pools, and flooded cellars
- Removal of nuisance water from gullies or pedestrian underpasses
- Coronada SX for aggressive wastewater

Light drainage pump type ABS IP



Features and benefits
- Fitted with automatic level control
- Stainless steel pump for corrosive media with vortex hydraulics
- Passage of solids 30 mm
- Standard version with high grade stainless steel, Viton seals and PVC cable

Key characteristics

Capacities	up to 18 m^3/h
Heads	up to 11 m
Temperatures	40°C up to 60°C (max. 5 minutes)
Motor power	1.1 kW

Applications
- Pumping of aggressive media, as well as clear and rain water
- Blockage-free pumping of liquids containing a high proportion of solid or fibrous matter
- Dewatering of buildings and sites
- Emptying or filling of containers
- Suitable for use in septic tanks, for emptying flooded cellars, and for drainage

Light wastewater pump type ABS MF 154-804



Features and benefits
- With or without automatic level control
- Compact shape, fittings for easy mounting, and small sump requirements enable a quick and cost-effective installation

Key characteristics

Capacities	up to 58 m^3/h
Heads	up to 16 m
Temperatures	40°C up to 60°C (max. 5 minutes)
Motor power	0.42 to 1.8 kW

Applications
- Removal of wastewater without toilet waste and rainwater
- Pumping of flooded cellars
- Removal of nuisance water from gullies or pedestrian underpasses
- Pumping of fluids containing gaseous or abrasive particles, thanks to vortex hydraulics

Light wastewater pump type ABS MF 154 HW



Features and benefits
- Compact shape, fittings for easy mounting, and small sump requirements enable a quick and cost-effective installation
- Designed to cover a wide range of internal and external dewatering applications

Key characteristics

Capacities	9 m^3/h
Heads	8 m
Temperatures	80°C
Motor power	0.42 kW

Applications
- Pumping of high temperature discharge water from laundries, commercial washing machines etc.
- Filling and emptying of containers, drainage of flooded cellars and removal of rainwater
- Suitable for pumping of fluids containing gaseous or abrasive particles

Submersible grinder pumps type ABS Piranha



Features and benefits
- Unique Piranha shredding system
- Automatic coupling system
- Piranha PE with Premium Efficiency IE3 motor
- Two and four-pole design
- Multi-stage high head 60 Hz version with shredding system available

Key characteristics

Capacities	up to 22 m^3/h / 119 USgpm
Heads	up to 70 m / 269 ft.
Temperatures	40°C up to 60°C (max. 5 minutes) / 104°F up to 140°F (max. 5 minutes)
Motor power	1.0 to 11.0 kW / 1.34 to 16.8 kW / 1.34 to 14.74 hp / 1.80 to 22.52 hp

Applications
- Sewage removal from living units and houses in remote settlements where:
- The laying of a conventional sewer would be too expensive
- Large ground undulations are present
- It is only possible to lay small-diameter pipe lines

Light drainage pump type ABS Robusta



Features and benefits
- Fitted with automatic level control
- Supplied with built-in check valve
- 10 m / 33 ft. cable with plug
- Suitable for small sumps from 300 x 300 mm / 11.8 x 11.8 in.
- Detachable suction ring. When fitted into the screen, enables pumping down to 3 mm / 0.12 in

Key characteristics

Capacities	up to 13 m^3/h / 57 USgpm
Heads	up to 8.8 m / 30 ft.
Temperatures	40°C up to 60°C (max. 5 minutes) / 104°F up to 140°F (max. 5 minutes)
Motor power	0.36 to 0.50 kW / 1/4 to 1/3 to 1/2 hp

Applications
- Pumping clear and wastewater from house, garden or yard

Submersible recirculation pump type ABS XRCP

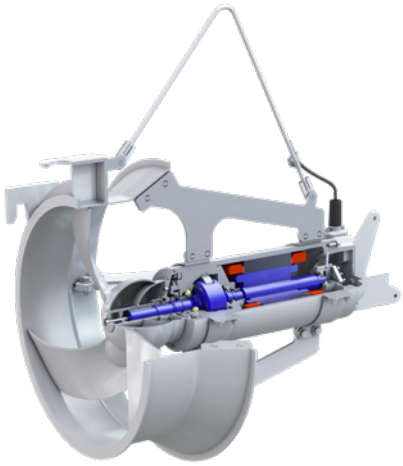

Features and benefits
- Strongly designed for high reliability
- Premium Efficiency motor ensures lowest possible energy consumption
- No maintenance – lubricated for life
- Hydraulic-optimized stainless steel propeller ensures highest possible mixing performance

Key characteristics

Capacities	up to 1.68 m^3/s (50 Hz) / 1.68 m^3/s / 25'680 USgpm (60 Hz)
Heads	up to 1.63 m / 4.7 ft.
Temperatures	up to 40ºC / 104ºF
Motor power	25 kW (50 Hz) / 25 kW / 33.5 hp (60 Hz)

Applications
- Pumping and recirculation of activated sludge in sewage treatment plants
- Pumping of surface and river water
- Hazardous locations: Certification for ATEX (Ex II 2G k Ex d IIB T4), FM and CSA as option

Submersible recirculation pump type ABS RCP

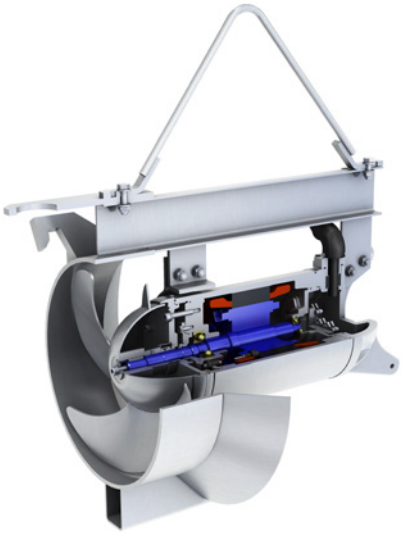

Features and benefits
- Compact design
- Maintenance friendly
- High hydraulic efficiencies
- High operation reliability
- Simple installation

Key characteristics

Capacities	1.25 m^3/s (50 Hz) / 1.25 m^3/s / 19'800 USgpm (60 Hz)
Heads	up to 1.8 m / 6 ft.
Temperatures	up to 40ºC / 104ºF
Motor power	22 kW (50 Hz) / 25 kW / 33.5 hp (60 Hz)

Applications
- Pumping and recirculation of activated sludge in sewage treatment plants
- Pumping of surface and river water
- Hazardous locations: certification for ATEX (Ex II 2G k Ex d IIB T4), FM and CSA as option

Lifting stations

Lifting station type ABS Nirolift



Features and benefits
- Globular shape for extra strength
- Easily transported and fitted. Compact dimensions allow passage through a standard door opening
- Kit available as an accessory for sealing the top of the tank to a damp-proof course
- Universally adjustable in height and can be swiveled: easy to align with floor levels and tiling patterns

Key characteristics

Capacities	up to 18 m^3/h
Heads	up to 11 m
Temperatures	40°C up to 60°C (max. 5 minutes)
Motor power	0.16 to 0.56 kW

Applications
- Pumping wastewater without toilet waste
- Washing machines, sinks, dishwashers, showers, and bathtubs

Lifting station type ABS Piranhamat



Features and benefits
- Ready for installation; robust, compact tank for buildings
- Easily transported and installed
- Fitted with Piranha submersible grinder pumps for problem-free pumping of sewage containing toilet waste

Key characteristics

Capacities	up to 9 m^3/h / 40 USgpm
Heads	up to 30 m / 98 ft.
Temperatures	40°C up to 60°C (max. 5 minutes) / 104°F up to 140°F (max. 5 minutes)
Motor power	0.40 to 1.7 kW / 0.9 to 2.4 hp

Applications
- Sewage and wastewater containing toilet waste
- Locations where the diameter of the discharge line is restricted

Lifting station type ABS Sanimat



Features and benefits
- Ready for installation
- Robust, compact tank
- Easily transported and fitted, compact dimensions allow passage through a standard door opening
- Problem-free pumping of sewage and wastewater
- Dynamic pressure level sensor on the tank, with separate sensors for inflow level and high water alarm

Key characteristics

Capacities	up to 165 m^3/h
Heads	up to 18 m
Temperatures	40°C up to 60°C (max. 5 minutes)
Motor power	1.3 to 6.0 kW

Applications
- Sewage and wastewater containing toilet waste
- Apartment blocks, hospitals, hotels, and large commercial developments

Lifting station type ABS Sanimax



Features and benefits
- Supplied as standard with pump, automatic level control and non-return valve
- Compact lifting station suitable for installation at floor level near the wastewater source below the sewer backwash level
- Flood-proof, with and odor preventing vent system
- Alarm float switch available as accessory

Key characteristics

Capacities	up to 4 m^3/h
Heads	up to 11 m
Temperatures	40°C up to 60°C (max. 5 minutes)
Motor power	0.16 to 0.56 kW

Applications
- Pumping of wastewater without toilet waste
- Sinks
- Showers and bathtubs
- Domestic washing machines
- Domestic dishwashers, showers, and bathtubs

Lifting station type ABS Sanisett



Features and benefits
- Synthetic, single or twin pumping station for wastewater without toilet waste
- Easily transported and fitted. Compact dimensions allow passage through a standard door opening
- Kit available as an accessory for sealing top of tank to damp proof course
- Universally adjustable in height and can be swiveled: easy to align with floor levels and tiling patterns

Key characteristics

Capacities	up to 34 m^3/h
Heads	up to 21 m
Temperatures	40°C up to 60°C (max. 5 minutes)
Motor power	0.16 to 2.0 kW

Applications
- Pumping of wastewater without toilet waste
- Washing machines, sinks, dish- washers, showers, and bathtubs
- For pumping of sewage with toilet waste outside of areas covered by EN when using Piranha pump

Lifting station type ABS Synconta



Features and benefits
- Simple pump installation and maintenance – no need to enter the sump
- Pump seals automatically onto the discharge line when lowered into the high level coupling, irrespective of the inflow or direction of the discharge lines
- For fitting with pumps from the Piranha and AS ranges
- The Synconta family is available in three different models (700 / 800 / 900)

Key characteristics

Capacities	up to 38 m^3/h
Heads	up to 37 m
Temperatures	40°C up to 60°C (max. 5 minutes)
Motor power	1.3 to 2.6 kW

Applications
- Sewage and wastewater containing toilet waste

Progressing cavity pumps

PC transfer pump

Features and benefits
- Designed to deliver constant capacity with viscous fluids and shear thinning non-Newtonian fluids
- Selected drives and gearboxes with many low-speed options are available to reduce pump wear
- Compact for space saving, can be installed vertically or horizontally and run in either direction
- Competitively priced process pump with integral direct drive and gearbox, baseplate optional

Key characteristics

Capacities	up to 440 m^3/h / 1’900 USgpm
Pressures	up to 24 bar / 350 psi
Temperatures	-10 up to 100°C / 14 up to 212°F

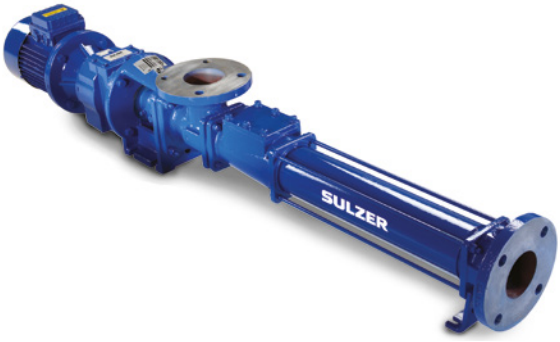

Applications
- Sludge handling and transfer
- Municipal and industrial effluent
- Shear sensitive processes
- Shear thinning slurries

PC transfer perform pump

Features and benefits
- Saves time with maintain in place features, easy to de-rag and no need to disconnect the pipework
- Designed for use in sludge plants, where high reliability is essential and downtime is kept to a minimum
- An extension of the PC transfer pump with material variants for a wide range of process applications
- Robust drives and gearboxes with low running speeds form an integral part of the unit design

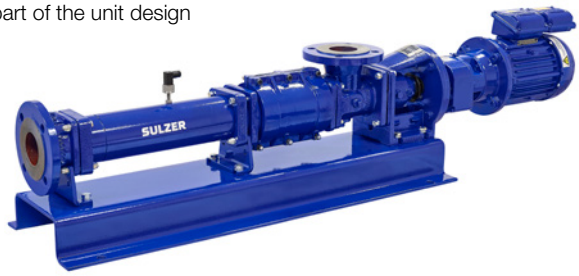

Key characteristics

Capacities	up to 225 m^3/h / 990 USgpm
Pressures	up to 12 bar / 170 psi
Temperatures	-10 up to 100°C / 14 up to 212°F

Applications
- Sludge handling and transfer
- Municipal and industrial effluent
- Shear sensitive processes
- Shear thinning slurries

PC cake pump

Features and benefits
- A large auger inlet and screw conveyor to deliver consistent pumping and push the cake to pump
- Saves time with maintain in place features, easy to disassemble, no need to disconnect the pipework
- Feed chamber easily disconnects allowing access for removal of the rotor and screw conveyor assembly
- Designed for use in sludge plants, where high reliability is essential and downtime is kept to a minimum

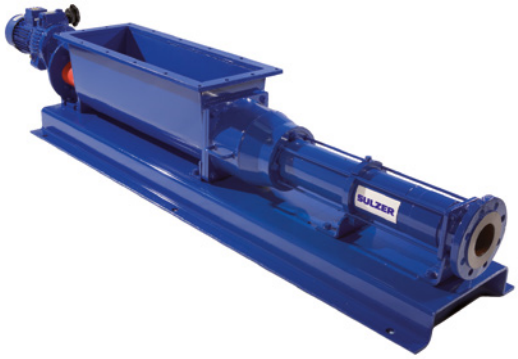

Key characteristics

Capacities	up to 49 m^3/h / 216 USgpm
Pressures	up to 24 bar / 350 psi
Temperatures	-10 up to 100°C / 14 up to 212°F

Applications
- Thickened sludge cake (>30% DS)
- Dewatered sludge transfer
- Sludge blending
- Industrial process sludges with high % DS

PC dosing pump

Features and benefits
- For low flow, metering and dosing applications, with continuous and accurate capacity demands
- Gentle pumping action, minimizes shear and crush damage to the pumped product
- Dosing pump parts are interchangeable with the PC transfer range, with stock standardization benefits
- An enhanced coupling rod design, gives higher pressure capabilities, up to 72 bar

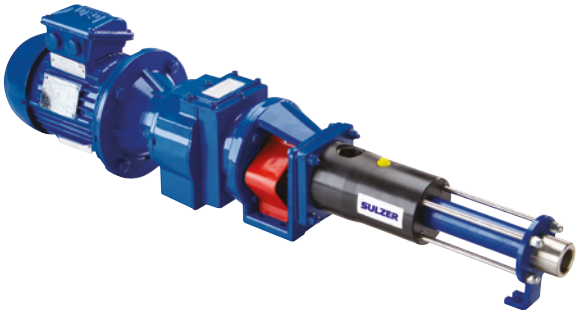

Key characteristics

Capacities	5 to 1’250 l/h / 0.02 to 5.50 USgpm
Pressures	up to 72 bar / 1’044 psi
Temperatures	up to 120°C / 248°F

Applications
- Sludge dewatering
- Controlled flocculent pumping
- General industry and chemical processing

Grinders

Muffin Monster™, open channel



Features and benefits
- Dual-shafted, slow-speed, high-torque design grinds tough solids
- Protects pumps and other critical equipment from clogs and damage caused by large debris
- Grinding separates organic from inorganic materials for more efficient wastewater treatment processes
- Cutter stack heights up to 1’500 mm

Key characteristics
Capacities up to 1’277 m^3/h / 5’620 USgpm

Applications
- Pump station protection
- Wastewater treatment headworks protection
- Private facility discharge to municipal sewer system compliance

Muffin Monster™, inline



Features and benefits
- Dual-shafted, slow-speed, high-torque design grinds tough solids
- Protects pumps, centrifuges and other sensitive downstream equipment from large debris
- Easy to remove cutter cartridge in 30K Muffin Monster
- Pipe flange diameters from 100 to 500 mm

Key characteristics
Capacities up to 1’558 m^3/h / 6’860 USgpm
Pressures up to 10.3 bar / 150 psi

Applications
- Sludge line protection
- Pump station protection
- Wastewater treatment headworks protection
- Private facility discharge to municipal sewer system compliance

Channel Monster™



Features and benefits
- High-flow, single or dual screening drums
- Dual-shafted, slow-speed, high-torque design grinds tough solids
- Protects pumps and other critical equipment from clogs and damage caused by large debris
- Grinding separates organic from inorganic materials for more efficient wastewater treatment processes
- Cutter stack heights up to 2’250 mm

Key characteristics
Capacities up to 9’306 m^3/h / 59 mgd

Applications
- Pump station protection
- Wastewater treatment headworks protection

Submersible dewatering pumps

Submersible drainage pump J and XJ



Features and benefits
- Easy and fail-safe starting with optional AquaTronic
- Impeller in white cast iron and diffusers coated in oil-resistant nitrile rubber, provide high abrasion resistance
- Double outer casing and good heat convection enable the pump to operate continuously at low levels – or even run dry without damaging the motor
- External inspection ports for the oil and motor chambers enable quick and easy evaluation of the shaft seal during service
- Conversion between high-volume and high head hydraulics is managed with only a few parts, ensuring the right performance for the application

Key characteristics

Capacities	up to 330 l/s / 5’440 USgpm
Heads	up to 200 m / 754 ft.
Motor power	up to 90 kW / 145 hp

Applications
- Water and dirty water mixed with light abrasives

Submersible drainage center-line pump JC and XJC



Features and benefits
- Easy and fail-safe starting with optional AquaTronic
- An impeller and wear ring in white cast iron, as well as diffusers coated in oil-resistant nitrile rubber, provide high abrasion resistance
- Double outer casing and good heat convection enable the pump to operate continuously at low levels – or even run dry without damaging the motor
- Due to the modular design, the same parts can be used for different pumps, which lowers the overall service costs
- The high-efficiency motor and new hydraulics combine with low-friction bearings to reduce power losses
- Conversion between high-volume and high-head hydraulics is managed with only a few parts, ensuring the right performance for the application
- A slim design allows the pumps to fit in boreholes or other applications with limited installation space

Key characteristics

Capacities	up to 54 l/s / 865 USgpm
Heads	up to 76 m / 308 ft.
Motor power	up to 11.8 kW / 18 hp

Applications
- Water and dirty water mixed with light abrasives

Submersible sludge pump JS and XJS



Features and benefits
- Easy and fail-safe starting with optional AquaTronic
- A free-flow vortex impeller and pump volute make the pump ideal for pumping water mixed with solids up to 48x60 mm
- Both the impeller and volute are made from heavy-duty ductile iron for maximum durability
- The top cover and motor housing are made of lightweight aluminum, which creates a pump that is very easy to handle and install
- The high-efficiency motor and hydraulics combine with low-friction bearings to reduce power losses

Key characteristics

Capacities	up to 31 l/s / 475 USgpm
Heads	up to 36 m / 131 ft.
Motor power	up to 11.8 kW / 18 hp

Applications
- Dirty water and water mixed with solids

Vertical pumps

JTS standard vertical turbine pump



Features and benefits
- Reliable pump with standard configurations for short lead time
- Packed stuffing box for reliable sealing and simple maintenance, mechanical seal is optional
- Rubber-lined product-lubricated bearing in bowls and columns for long maintenance- free periods, other bearing materials are also available
- Suction bell provided with anti-vortex ribs, tail bearing, and replaceable wear rings or bowl liner
- Axial thrust bearing in pump or in motor

Key characteristics

Capacities	up to 1’500 m^3/h / 8’000 USgpm
Heads	up to 300 m / 1’000 ft.
Pressures	up to 36 bar / 525 psi
Temperatures	up to 85°C / 185°F

Applications
- Municipal water and irrigation supply
- Water intake

SJD-API vertically suspended API 610 type VS6/VS7

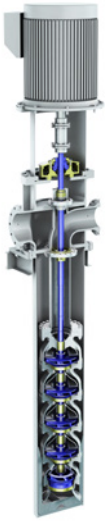

Features and benefits
- Reduced number of stages results in shorter and more reliable pumps
- Double suction or high suction specific speed (Nss) single suction 1st stage impeller designs available to reduce overall pump length
- High efficiency with reduced power consumption
- Modular construction to fit project nozzle location requirements
- High head per stage diffuser hydraulics for low flow applications

Key characteristics

Capacities	up to 5’000 m^3/h / 22’000 USgpm
Heads	up to 900 m / 3’000 ft.
Pressures	up to 78 bar / 1’130 psi
Temperatures	up to 205°C / 400°F

Applications
- LPG and LNG with J-unit for cryogenic services
- Low Net Positive Suction Head Available (NPSHA) applications
- Pipeline / tank farm boosting

SJD-CEP vertical, can-mounted, turbine type pump

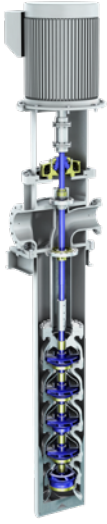

Features and benefits
- Carbon graphite product lubricated bearing in bowls and columns for long maintenance-free periods
- Removable seal housing allows servicing throttle bushing without removing the head
- Separate fabricated driver stand allows using one suction and discharge head per pump size
- Spacer coupling allows servicing the mechanical seal and thrust bearing as needed
- Can is provided with lateral and anti-rotational ribs uniform inlet velocity along the can length
- Various options available for the first stage impeller hydraulics, including double suction impeller allowing optimum sizing of pump

Key characteristics

Capacities	up to 4’900 m^3/h / 21’560 USgpm
Heads	up to 470 m / 1’540 ft.
Pressures	up to 47 bar / 680 psi
Temperatures	up to 100°C / 212°F

Applications
- Condensate extraction
- Heater drain

SJS submersible pump



Features and benefits
- No line-shaft couplings or bearings to maintain
- Low, medium and high voltage submersible motors
- Water/glycol filled environmentally friendly motor for improved efficiency
- Variety of materials available from stainless steel to super duplex steel
- Two configurations available: standard (motor below pump) and inverted for low Net Positive Suction Head Required (NPSHR) applications (pump below motor)

Key characteristics

Capacities	up to 10’000 m^3/h / 44’000 USgpm
Heads	up to 230 m / 750 ft.
Pressures	up to 40 bar / 600 psi
Temperatures	up to 80°C / 180°F

Applications
- Offshore seawater lift
- Offshore diesel genset firewater
- Offshore ballast water
- Onshore municipal pressure boosting

SJT-API vertically suspended API 610 type VS1/VS2



Features and benefits
- High head per stage / reduced number of stages results in shorter, more reliable pumps
- Double suction on larger sizes can reduce pump length
- High efficiency with reduced power consumption
- Modular construction to fit project nozzle location requirements

Key characteristics

Capacities	up to 5’000 m^3/h / 22’000 USgpm
Heads	up to 900 m / 3’000 ft.
Pressures	up to 78 bar / 1’130 psi
Temperatures	up to 205°C / 400°F

Applications
- Water circulation pumps
- Seawater lift pumps
- Stormwater pumps

SJT vertical pump

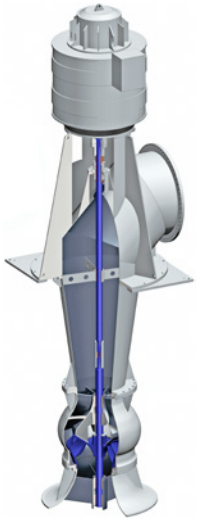

Features and benefits
- Optimized hydraulics for high efficiency
- Packed stuffing box for reliable sealing and simple maintenance; mechanical seal is optional
- Rubber-lined product-lubricated bearing in bowls and columns for long maintenance-free periods; other bearing materials are also available
- Optional spacer coupling allows servicing of seal and thrust bearing as required

Key characteristics

Capacities	up to 12’000 m^3/h / 52’840 USgpm
Heads	up to 1’830 m / 6’000 ft.
Pressures	up to 78 bar / 1’130 psi
Temperatures	up to 100°C / 212°F

Applications
- Cooling water
- Nuclear safety services
- Auxiliary services
- Water intake and irrigation

SJT-GEO production hot water pump



Features and benefits
- Increased flow for higher geothermal hot water production capacity of 13 3/8” wells
- Increased power transmission capacity
- Increased temperature for high enthalpy geothermal resources
- Product lubricated bearings
- Up to 5.5” end-play axial float for shaft adaptation to shallow geothermal wells

Key characteristics

Capacities	up to 680 m^3/h / 3’000 USgpm
Heads	up to 700 m / 2’300 ft.
Pressures	up to 100 bar / 1’450 psi
Temperatures	up to 220ºC / 428ºF

Applications
- Production hot water for geothermal power plants

SJT-CWP vertical pumps

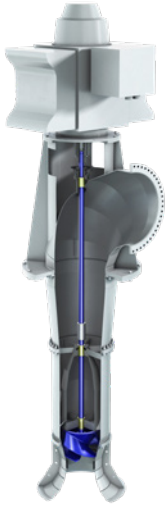

Features and benefits
- Modern fabricated suction bell and bowl casing incorporating swirl break for stable pump performance curve
- Semi-open or closed cast impeller design for best fitting and optimum efficiency
- Segmented elbow to reduce the internal losses
- Optional full pull-out construction to reduce lifting crane capacity and ease maintenance

Key characteristics

Capacities	up to 90’000 m^3/h/ 396’000 USgpm
Heads	up to 60 m / 200 ft.
Pressures	up to 8.6 bar / 125 psi
Temperatures	up to 50°C / 122°F

Applications
- Cooling water
- Water intake
- Water supply and irrigation
- Flood control and drainage

VAS vertical sulfuric acid pump



Features and benefits
- High corrosion resistance due to compact and unique design
- Wide range of highly corrosive-resistant materials guarantees high durability
- Reliable design ensures longer maintenance-free operation
- Easy assembly and maintenance

Key characteristics

Capacities	up to 4’000 m^3/h / 17’500 USgpm
Heads	up to 45 m / 148 ft.
Pressures	up to 20 bar / 290 psi
Temperatures	up to 150°C / 291°F
	up to 250°C / 480°F (heat recovery)

Applications
- Absorption tower
- Drying tower
- Heat recovery system

VEY and VNY molten salt pump



Features and benefits
- Engineered suction design for optimized submergence
- Engineered bearing bushings for better shaft alignment and adaptation to the thermal expansion
- Main shaft sealing by throttle bushing for permanent leak-off recirculation to the molten salt tank
- Auxiliary shaft sealing deflector preventing leakage of molten salt to the atmosphere
- Efficient thermal barrier between hot/cold sections
- Muff coupling to ease dismantling
- Special design to allow thermal expansions: extended wear ring zone and clearances calculated considering all the relative expansions

Key characteristics

Capacities	up to 4’000 m^3/h / 17’600 USgpm
Heads	up to 380 m / 1’250 ft.
Pressures	up to 100 bar / 1’450 psi
Temperatures	up to 600°C / 1’100°F

Applications
- Molten salt pump
- Thermal storage

Vertical sump pumps

OCV and OCVL sump pumps ISO 13709 / API 610 type VS4



Features and benefits
- API 682 cartridge type mechanical including gas seal options
- Oil lubricated 7300 series BECBM thrust bearing
- Keyed impeller and API 610 Fig. 37 bearing spacing
- Buttwelded and hydrotested discharge pipe and elbow

Key characteristics

Capacities	up to 750 m^3/h / 2'200 USgpm
Heads	up to 280 m / 880 ft.
Pressures	up to 40 bar / 580 psi
Temperatures	up to 205°C / 400°F

Applications
- All sump applications with moderate solid content
- Oily water transfer
- Lube oil

OCVSF ISO 13709 / API 610 type VS4

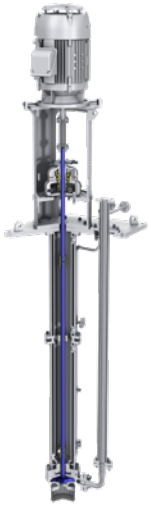

Features and benefits
- Column and discharge pipe fully jacketed to maintain sulfur in molten state
- Special open impeller with free draining features for handing molten sulfur
- Full compliance to API 610 latest edition
- API 682 mechanical seal or packed gland option

Key characteristics

Capacities	up to 500 m^3/h / 2'200 USgpm
Heads	up to 280 m / 880 ft.
Pressures	up to 40 bar / 580 psi
Temperatures	up to 205°C / 400°F

Applications
- Refinery sulfur pit or tank transfer
- Refinery granulator feed pump
- Molten sulfur filter feed pump
- Molten sulfur furnace feed pump

VA cantilever sump pump

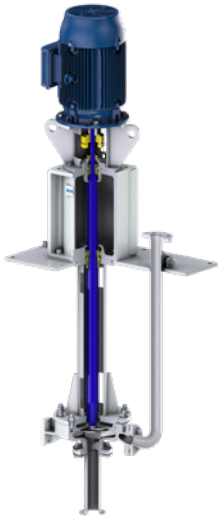

Features and benefits
- Simple and robust design with ease of maintenance
- All types of hydraulics available: semi-open, open, closed or vortex impellers
- No sealing required
- No intermediate bearing
- Dry running is allowed on certain sizes

Key characteristics

Capacities	up to 1'500 m^3/h / 6'600 USgpm
Heads	up to 100 m / 328 ft.
Pressures	up to 20 bar / 290 psi
Temperatures	up to 120°C / 248°F

Applications
- Clear and contaminated sump
- Corrosive, encrusting liquids and slurries

VAP heavy-duty cantilever sump pump

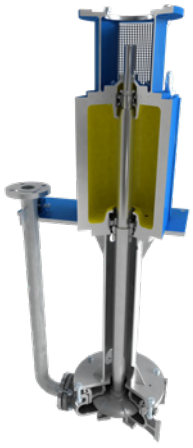

Features and benefits
- Heavy-duty construction
- All types of hydraulics available: semi-open, open, closed or vortex impellers
- No sealing required
- No intermediate bearing
- Dry running is allowed on certain sizes

Key characteristics

Capacities	up to 3’500 m^3/h / 15’400 USgpm
Heads	up to 150 m / 500 ft.
Pressures	up to 20 bar / 290 psi
Temperatures	up to 900°C / 1’652°F

Applications
- Highly corrosive, abrasive, encrusting liquids and slurries
- High-temperature pumping
- Molten metal pumping

VM vertically suspended sump pump



Features and benefits
- Simple and robust design with ease of maintenance
- All types of hydraulics available: semi-open, open, closed or vortex impellers
- No sealing required for clear liquids
- Single and dual seal design available for contaminated liquids

Key characteristics

Capacities	up to 3'500 m^3/h / 15’500 USgpm
Heads	up to 100 m / 330 ft.
Pressures	up to 20 bar / 290 psi
Temperatures	up to 120°C / 250°F

Applications
- Clear and contaminated sump
- Corrosive, encrusting liquids and slurries

Agitators and submersible mixers

SALOMIX™ SSF side-mounted horizontal agitators

Features and benefits
- Heavy-duty gear-driven agitator
- Suitable for the most severe industrial applications
- High efficiency EX3 propellers results in energy savings and improved agitation
- Conical body shape with in-tank bearing supports the propeller and ensures vibration free operation
- Comprehensive hydraulic coverage enabling the use in all mixing applications
- Low total cost of ownership through smart design and energy efficient propeller
- Quick and easy installation, safe operation, easy maintenance and service

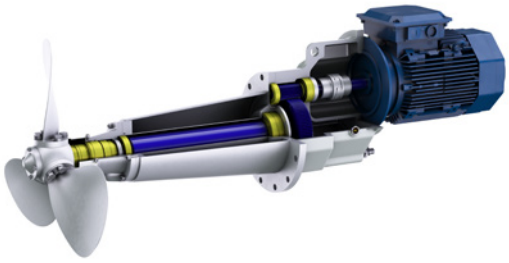

Key characteristics

Stock consistency	up to 6%
Propeller diameters	800 to 1’700 mm / 32 to 67 in.
Power	7.5 to 160 kW / 10 to 200 hp

Applications
- Mixing in tanks and storage towers
- Clean and slightly contaminated liquids
- Viscous liquids
- Fibrous slurries, slurries

SALOMIX™ SSA side-mounted agitators belt drive

Features and benefits
- A robust belt-driven cantilever agitator
- Suitable for the most demanding industrial applications
- High-efficiency EX3 propellers results in energy savings and improved agitation
- Heavy-duty design with a bearing lifetime of minimum 200’000 hours
- Comprehensive hydraulic coverage enabling the use in all mixing applications
- Low total cost of ownership through smart design and energy efficient propeller
- Quick and easy installation, safe operation, easy maintenance and service
- Optional SOD shut-off device enables servicing the agitator without emptying the tank

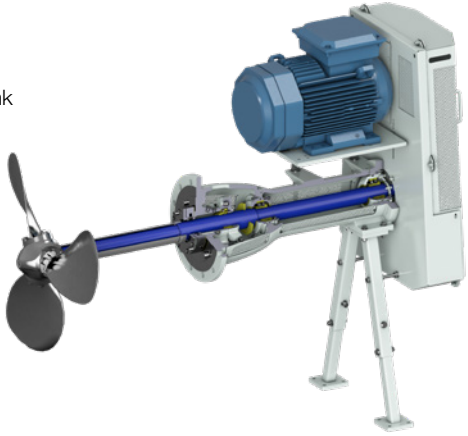

Key characteristics

Stock consistency	up to 6%
Propeller diameters	800 to 1’300 mm / 32 to 52 in.
Power	7.5 to 75 kW / 10 to 100 hp

Applications
- Mixing in tanks and storage towers
- Clean and slightly contaminated liquids
- Viscous liquids
- Fibrous slurries, slurries

SALOMIX™ SLR/STR gear drive

Features and benefits
- A gear-driven cantilever agitator for industrial use
- Suitable for various type of industries
- High-efficiency SHP propellers with good mixing result at low power
- Robust and compact gear
- Low total cost of ownership through smart design and energy efficient propeller
- Quick and easy installation, safe operation, easy maintenance and service

Key characteristics

Stock consistency	up to 6%
Propeller diameters	315 to 800 mm / 12 to 30 in.
Power	2.2 to 11 kW / 3 to 15 hp

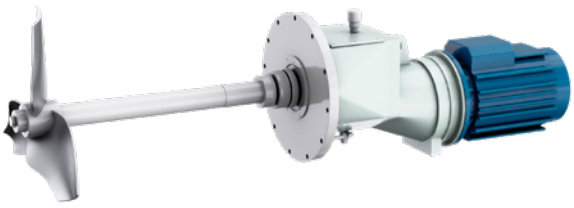

Applications
- Mixing in tanks and storage towers
- Clean and slightly contaminated liquids
- Viscous liquids, solid-containing liquids
- Fibrous slurries, slurries

SALOMIX™ SLH belt drive

Features and benefits
- Specially developed for green liquor dissolving tanks
- Cone construction with an in-tank bearing. This will give lower vibrations and more reliable operation.
- Oversized agitator
- Rigid belt drive to handle pressure shocks
- Double mechanical seals plus additional flushing for long seal lifetime
- Propeller blades in duplex steel for highest strength
- Strong agitation with energy-efficient MX4 propellers
- Sulzer's dilution cone DILCO



Key characteristics

Propeller diameters	800 to 1700 mm / 32 to 67 in.
Power	22 to 110 kW / 30 to 150 hp

Applications
- Green liquor dissolving tanks

SALOMIX™ L, LV, LA and LM top-mounted vertical agitators

Features and benefits
- The L series covers gear or belt-driven agitators mounted vertically on the tank top or bottom flange
- Versatile impeller options meet any process needs in compliance with the rheology of the mixed fluid
- Maximum modular component flexibility
- Applicable for tanks from 1 to 2'500 m^3 / 88'285 ft^3
- The large hydraulic coverage satisfies the most demanding requirements of industrial agitation applications



Key characteristics

Propeller diameter	up to 8'000 mm / 316 in.
Shaft length	up to 30 m / 100 ft.
Power	up to 450 kW / 600 hp
Temperatures	up to 180°C / 356°F

Applications
- Mixing in tank
- Clean and slightly contaminated liquids
- Viscous liquids and liquids with high gas content
- Fibrous slurries, slurries
- Solids containing liquids

Scaba top-mounted agitators



Features and benefits
- Scaba top-mounted series covers gear- or belt-driven agitators mounted vertically on the tank top or bottom flange.
- Dry installed agitators rely on a deep process knowledge, which enable us to tailor-make the agitators to meet your specific need. This ensures the required process result with a minimum energy input
- Versatile impeller options
- High efficiency SHP propellers
- Good axial flow
- Scaba TreatX standardized agitators for water and wastewater treatment processes

Key characteristics

Propeller diameter	100 mm to 6 m / 4 to 236 in.
Shaft length	up to 30 m / 100 ft.
Power	up to 450 kW / 600 hp
Temperatures	up to 180°C / 356°F

Applications
- Mixing in tanks
- Clean and slightly contaminated liquids
- Viscous liquids and liquids with high gas content
- Fibrous slurries, slurries
- Solids-containing liquids

Submersible mixer type ABS XRW

Features and benefits
- Lowest energy consumption
- Easy upgrade of existing installations supported by a wide range of brackets and adapters
- Operational flexibility with variable speed to match the real mixing task
- and to manage changes throughout the year
- The robust design and the Premium Efficiency motor give superior reliability and long operating life

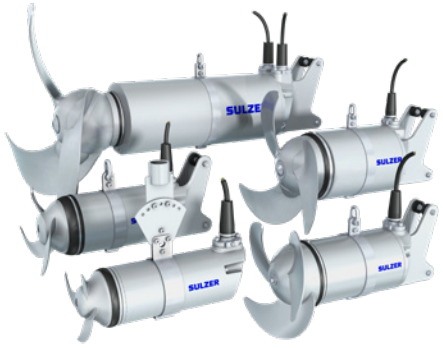

Key characteristics

Capacities	up to 1.79 m^3/s / 28'300 USgpm
Diameters	up to 900 mm / 35 in.
Temperatures	up to 40ºC / 104ºF

Applications
- Mixing and stirring applications in sewage treatment plants and industrial areas
- Homogenization of highly concentrated sewage sludge

Submersible mixer type ABS RW

Features and benefits
- Compact, water pressure-tight design
- Easy to replace existing installations using a wide range of brackets and adapters
- Shorter mixing times
- Reliable with a minimal risk of motor overloading



Key characteristics

Capacities	up to 6'300 m^3/h / 28'000 USgpm
Diameters	up to 900 mm / 35 in.
Temperatures	up to 40ºC / 104ºF
Motor powers	22 kW (50 Hz) / 25 kW / 33.5 hp (60 Hz)

Applications
- Prevention of deposits and floating crusts in pump sumps
- Mixing and stirring applications in sewage treatment plants and industrial areas
- Homogenization of highly concentrated sewage sludge

Flow booster type ABS XSB

Features and benefits
- Premium Efficiency motor gives total efficiency improvement of up to 25% compared to other conventional mixer designs
- Compact, water pressure-tight design
- Provides high thrust and high flow capacity
- Self-cleaning propellers provides vibration-free operation
- Increased performance variations with an extended and wide duty range
- Superior reliability and long operating life



Key characteristics

Capacities	up to 6.2 m^3/s (50 Hz) / 6.0 m^3/s / 95'200 USgpm (60 Hz)
Diameters	up to 2'750 mm /108 in.
Temperatures	up to 40ºC / 104ºF
Motor powers	up to 7.5 kW / 10.1 hp

Applications
- Gentle circulation and mixing in sewage treatment plants and industrial areas
- Low-speed wastewater mixing and stirring applications, including:
- Equalization of sewage
- Biological processes
- Selector (contact zone)
- Hazardous locations ATEX Ex II 2G k Ex d IIB T4

Flow booster type ABS SB



Features and benefits
- Robust and compact design
- Can be used in tanks of all shapes
- Hydrodynamic shape for optimum flow formation
- Drive unit optimized for mixing application
- Long operating life

Key characteristics

Capacities	up to 3.9 m^3/s (50 Hz) / 4.2 m^3/s / 62'000 USgpm (60 Hz)
Diameters	up to 2'500 mm / 98 in.
Temperatures	up to 40ºC / 104ºF
Motor powers	up to 4.5 kW (50 Hz) / 4.6 kW / 6.2 hp (60 Hz)

Applications
- Suspension of activated sludge
- Flow generation in oxidation ditches

Compressors and aeration

Disc diffuser system type ABS



Features and benefits
- Reliable and long-lasting
- Low pressure drop and high aeration efficiency
- Possibility of future increase in aeration capacity
- Quick and easy installation with flexible layout design
- High temperature endurance

Key characteristics

Air flow	0.5 to 15 m^3/h per diffuser
Max water depth	0.5 to 15 m

Applications
- Aeration of municipal wastewater
- Aeration of industrial wastewater

HSR turbocompressor



Features and benefits
- 100% oil-free, environmentally friendly and safe
- Premium efficiency, low life cycle costs
- Wear-free, low maintenance costs
- Real-time monitoring secures the trouble-free operation
- Vibration-free, low machine noise
- Advanced liquid cooling system enables energy recovery

Key characteristics

Flow	up to 56 m^3/min / 1'980 CFM
Pressure	2 to 9 bar (g) / 30 to 130 psig
Motor power	115 to 325 kW / 154 to 436 hp

Applications
- Suitable for providing oil-free compressed air for all industries

HST™ turbocompressor



Features and benefits
- High efficiency guaranteeing optimal life-cycle costs
- Low noise: no need for additional soundproofing
- Wear-free, requiring minimal maintenance
- Simple design with integrated components
- Accurate flow measurement
- Vibration-free, ensuring less stress for pipe work
- Fully certified
- Operates alongside all types of conventional blowers

Key characteristics

Flow	up to 16'000 Nm^3/h / 10'200 SCFM
Pressure rise	up to 130 kPa / 18.9 psi
Motor power	50 to 400 kW / 75 to 500 hp

Applications
- Aeration for treatment of municipal and industrial wastewater
- Industrial applications

Submersible aerator mixer OKI



Features and benefits
- High aeration efficiency
- Can run as an aerator and/or mixer according to process requirements
- Designed for non-clogging operation
- Suitable for both, continuous and intermittent process operation
- Suitable for all usual tank depths, especially deep tanks

Key characteristics

Oxygen transfer	up to 410 kg O_2 / h @ 12 m
Air flow	up to 3'600 m^3/h / 2'100 CFM
Water depth	4 to 12 m / 13 to 39 ft.
Motor power	5 to 37 kW / 7 to 50 hp

Applications
- Activated sludge basins and sequence batch reactors (SBR), membrane bio reactors (MBR), and moving bed bio reactors (MBBR)
- Sludge storage and stabilization
- Flotation of oil and grease, additional aeration

Aerator type ABS Venturi Jet



Features and benefits
- Easily installed, stand-alone or portable with optional fixed installation
- Reduces odors and septic conditions
- Cost-effective installation
- Self-aspirating; no need for compressed air
- Operates irrespective of water level variation
- Very low noise level, no aerosol formation, and no sedimentation on the bottom, thus minimizing environmental effects

Key characteristics

Air flow	50 to 550 m^3/h / 60 to 650 CFM
Max water depth	2 to 6 m / 6.6 to 19.7 ft.
Motor power	1.3 to 18.5 kW / 1.7 to 24.8 hp

Applications
- Activated sludge basins and Sequencing Batch Reactors (SBR), providing aeration and mixing in one unit
- Mixing and equalization basins
- Sludge storage and stabilization
- Flotation of oil and grease, additional aeration

Submersible aerator type ABS XTA and XTAK



Features and benefits
- Easy to install and freestanding on the bottom of the basin; no need to empty the basin for installation
- Wear-resistant and long lifetime
- Very low noise level, no aerosol formation, and no sedimentation on the bottom, thereby minimizing environmental effects
- Self-cleaning, high aeration efficiency, excellent solids suspension capability

Key characteristics

Oxygen transfer	up to 70 kg O_2/ h @ 6 m
Max water depth	2 to 6 m / 6.6 to 19.7 ft.
Motor power	3 to 75 kW / 4 to 100 hp

Applications
- Activated sludge basins and Sequencing Batch Reactors (SBR)
- Sludge storage and stabilization
- Flotation of oil and grease, additional aeration
- Neutralization of alkaline wastewater with CO_2 or flue gas

Medium consistency products

Features and benefits

- The Fluider™ technology includes proven innovative stock pumping ranges: MCE™, LCE™ and KCE™ pumping systems
- Highest efficiency, reducing power consumption and installation costs
- Correct fluidization prevents fiber over-treatment
- Degassing alternatives include a built-in degassing system, a separate external MDS degassing system, and degassing without a vacuum pump
- High-temperature pumping
- Low and high inlet level pumping
- One-drive unit system in most applications
- Proven long-life mechanical design

Key characteristics

Capacities	20 to 9'000 ADMT/d
Heads	up to 240 m / 787 ft.
Consistencies	6 to 18%



MCE™ pumping system

Applications

- Medium-consistency fibrous slurries up to 18%
- Medium-consistency fibrous slurries containing large solids
- Medium-consistency fibrous slurries with high gas content
- All pulp, paper and board medium consistency applications
- For related biomass and biofuel applications



LCE™ pumping system

Applications

- Semi-medium consistency fibrous slurries up to 10%
- Semi-medium consistency fibrous slurries containing solids
- Semi-medium consistency fibrous slurries with high gas content
- All pulp, paper and board medium-consistency fibrous slurry applications, including especially recycled fiber and mechanical fiber applications



KCE™ pumping system

Applications

- Semi-medium consistency fibrous slurries up to 8%
- Semi-medium consistency fibrous slurries containing solids
- Semi-medium consistency fibrous slurries with high gas content
- All pulp, paper and board semi-consistency fibrous slurry applications and biomass and biofuels applications

MC discharge scraper and the tower discharge pumping

Applications

- Discharging high-consistency fibrous slurry towers up to 13%
- Up to 20 to 35% consistency when using diluting scrapers
- Outlet consistency typically 8 to 13%



MC discharger

Applications

- Dividing and controlling high-consistency fibrous slurry flows discharging high-consistency and fibrous slurry reactors
- Gas removal option
- Chemical mixing



SX chemical mixer

Applications

- Mixing gases, steam or chemicals in-line to
- Fibrous slurries
- Clean and slightly contaminated liquids
- Viscous liquids
- Non-fibrous slurries

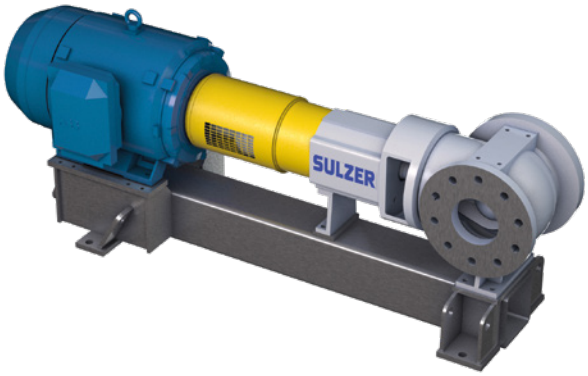

Tower management systems

SALOMIX™ TES top entry spreader

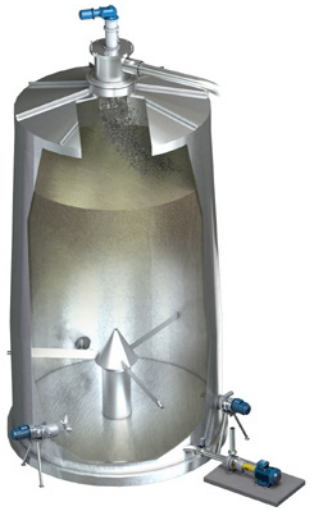

Features and benefits
- Spreads stock evenly on the top surface to control the flow in the upper, high-consistency part of the tower, and the quality of the discharged stock remains good
- Creates a uniform continuous downflow, with no stagnant zones
- Variable rotating speed always spreads a fresh top layer of stock, regardless of the surface level
- Prevents channeling and air entrainment into the stock

Key characteristics

Capacities	up to 600 l/s / 9'500 USgpm
Pressures	up to 3 bar / 43 psi as standard, for higher pressures as special
Temperatures	up to 180°C / 356°F

Applications
- Medium and high consistency storage and bleaching towers
- Tanks and towers to reduce channeling and reduce air content

SALOMIX™ GLI

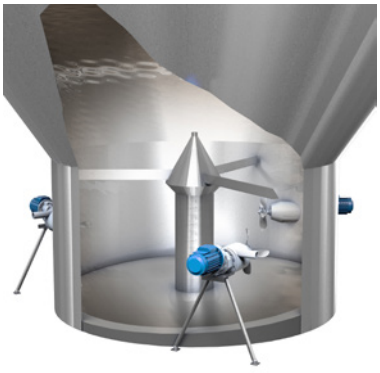

Features and benefits
- GLI is a special center fillet located at the bottom of the storage tower
- Enables trouble-free operation of high-consistency storage and bleaching towers with a large bottom zone using several agitators
- Ensures effective mixing, and dilution is intensified by baffles
- Creates a well-controlled mixing/dilution zone to the tower bottom
- Separates effectively the storage zone and the active mixing and dilution zone of the tower, thus ensuring even discharge consistency and good operation of the tower

Key characteristics

Capacities	tower bottoms of up to 12 m / 40 ft. in diameter

Applications
- Stable dilution and mixing process for high-consistency, fibrous slurry towers
- Large scale medium consistency storage and bleaching towers
- High-consistency bleaching towers
- Fiberline blow tanks

Slurry pumps

EMW-M heavy-duty metal slurry pump

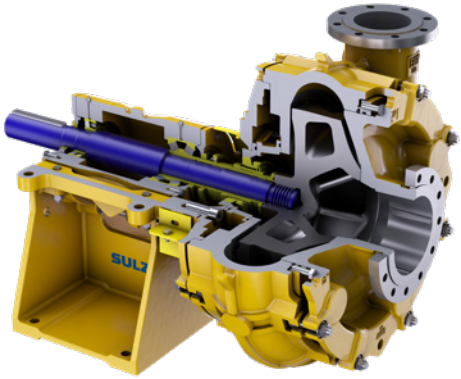

Features and benefits
- Extra high durability
- Minimized total cost of ownership
- Low energy consumption due to high efficiency
- Easy and quick installation and maintenance
- Low spare cost due to high standardization

Key characteristics

Capacities	up to 4'000 m^3/h / 17'600 USgpm
Heads	up to 95 m / 312 ft.
Pressures	up to 16 bar / 232 psi
Temperatures	up to 110°C / 230°F

Applications
- Mining and mineral processing
- Aggregates (sand and gravel)
- Chemical slurries

EMW-R heavy-duty rubber lined slurry pump



Features and benefits
- Extra high durability
- Minimized total cost of ownership
- Low energy consumption due to high efficiency
- Easy and quick installation and maintenance
- Low spare cost due to high standardization

Key characteristics

Capacities	up to 1'450 m^3/h / 6'385 USgpm
Heads	up to 55 m / 180 ft.
Pressures	up to 14 bar / 203 psi
Temperatures	up to 110°C / 230°F

Applications
- Mining and mineral processing
- Aggregates (sand and gravel)
- Chemical slurries

PLR slurry pumps

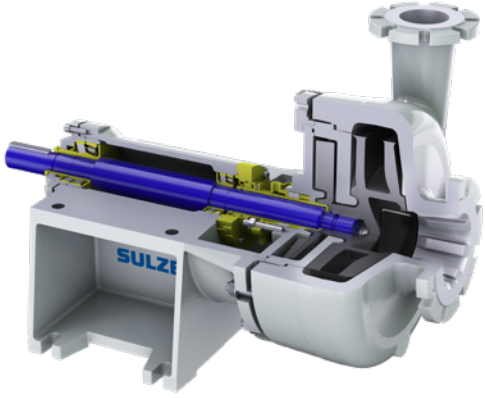

Features and benefits
- Maximum abrasion and corrosion resistance
- Extended pump and spare parts lifetime
- High reliability and durability
- Low spare part costs due to high interchangeability
- Maximum adaptability for specific duties

Key characteristics

Capacities	up to 3'900 m^3/h / 17'200 USgpm
Heads	up to 80 m / 262 ft.
Pressures	up to 50 bar / 735 psi
Temperatures	up to 150°C / 300°F

Applications
- Abrasive and corrosive slurries
- Ammonium nitrate
- Froth pumping and self-regulating application

Vacuum pumps

VRN liquid ring vacuum pump



Features and benefits
- Heavy-duty design
- Suitable for contaminated/corrosive gas
- Low maintenance
- Silent running

A wide selection of highly corrosion-resistant materials
- Austenitic stainless-steel
- Super austenitic stainless-steel
- Duplex stainless-steel
- Super duplex stainless-steel
- Separator tank available with fiberglas reinforced plastics (FRP)

Key characteristics
Capacities up to 23'000 m^3/h / 101'200 USgpm
Absolute suction pressure down to 50 mmHg

Applications
- Filtration under vacuum
- Vacuum condensers
- Crystallization
- Concentration



Control and monitoring equipment

Pump controller type ABS PC 111 and 211



Features and benefits
- Easy-to-use single (PC 111) and dual-pump controllers (PC 211)
- Improves the functionality and reliability of the pumping station throughout its lifecycle
- Start/stop based on floats or level sensor
- Easy setting via turn-knob
- Built-in current transformer
- Built-in moisture and temperature monitoring
- Built-in battery charger and buzzer

Applications
- Gravitation or pressurized municipal wastewater pumping stations

Equipment controller EC 531

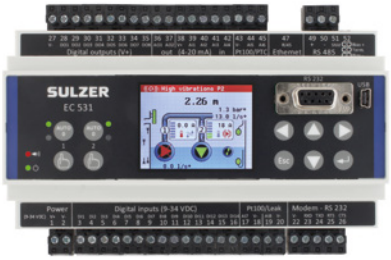

Features and benefits
- Operates as a standalone control and monitoring unit
- Minimizes operating costs and energy consumption
- Increases pumping station availability
- Easy to use and configure with built-in operator panel
- Supports all aspects of the LCC (life cycle cost) calculations

Applications
- Monitor and control of municipal wastewater pumping stations
- View alarms, pump status and trends
- Advanced monitoring including crash log functionality
- Manually control pumps and change settings

BlueLinQ Pro controller



Features and benefits
- Minimizes operating costs and increases pumping station availability
- Quick and easy configuration with the unique set-up wizard
- Operates as a standalone monitoring unit or as a complete pump station controller
- BlueLinQ system expansion modules available to install at any time

Applications
Controlling and monitoring municipal wastewater pumping stations with one to six pumps, mixers, controlled valves and more

Submersible pressure sensor type ABS MD 126 and 127



Features and benefits
- High-accuracy submersible hydrostatic level sensor
- Encapsulated in stainless steel and resistant to sewage water
- Designed to measure levels in liquids

Applications
- Measure levels of liquids such as storm water and wastewater in pump sumps

Control panel type ABS CP 116 and 216



Features and benefits
- Easy-to-use, compact control panel used with either one (CP 116) or two pumps (CP 216) conforming to ATEX
- Complete surveillance of pumps and station with transfer of alarms to central system over telemetry
- Measures and records the performance of station and equipment for a more reliable operation

Applications
- Municipal wastewater pumping stations

Leakage relay type ABS CA 461



Features and benefits
- Designed to spy and detect leakage in pumps and mixers
- Minimizes the risk of false alarms

Applications
- Municipal wastewater pumping stations

Temperature and leakage relay type ABS CA 462



Features and benefits
- Designed to spy and detect temperature and leakage in pumps and mixers
- Minimizes the risk of false alarms

Applications
- Municipal wastewater pumping stations

Screening, sedimentation and filtration solutions by Nordic Water

DynaCloth fiber disc filter

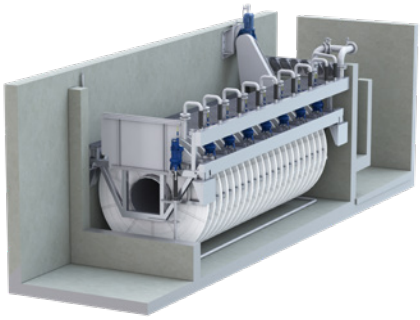

Features and benefits
- Provide high quality filtration performance using pile cloth technique
- Outside to inside flow path
- Particularly suitable for removal of fine particles where high quality effluent is required
- Tolerant of high inlet TSS (Total Suspended Solids) shock loads
- High operational reliability at competitive cost
- High flow rate capacity
- Continuous filtration during backwash eliminating need for additional units

Key characteristics

Flow capacity	10 to 2'600 m^3/h per filter
Submerged effective filter area	up to 258 m^2 in a single unit
Typical reject water volumes	1% to 4%
Filter cloth	nominal 5 and 10 µm equivalent

Three diameters available for different flow/load applications

Applications
- Various filtration applications in municipal and industrial sewage treatment plants
- Tertiary filtration, phosphorus removal etc

DynaDisc microscreen filter

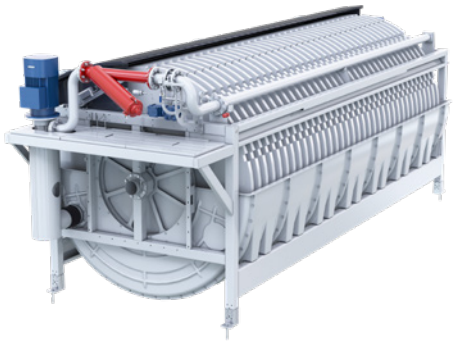

Features and benefits
- Well proven system for high filtration efficiencies
- Patented filter cassette for easy maintenance
- Integrated level tank increases lifetime of the filter cloths
- Already filtered water is used by the backwash system to protect the filter cloths
- Oscillating spray nozzles ensure
- an even and efficient cleaning and increases the lifetime of the filter cloth

Key characteristics

Flow capacity	10 to 50'000 m^3/h
Filter area	up to 251 m^2 in a single unit
Filter cloth	10 µm and upwards

Applications
- Filtration applications in municipal & industrial sewage treatment plants
- Tertiary filtration

DynaDrum self-cleaning drum filter



Features and benefits
- Rotating micro-screen designed for reliable and efficient removal of Suspended solids
- Simple and reliable design with low investment and maintenance costs
- Automatic control system for backwash and high pressure cleaning
- High efficiency spray nozzle design with minimized risk for clogging and to protect the filter cloths
- Innovative design for drum and inlet sealing for quick service and easy maintenance
- Primary treatment design features with remarkably low life cycle costs

Key characteristics

Flow capacity	2 to 10'000 m^3/h
Filter area	up to 20 m^2 in a single unit
Filter cloth	10 µm and upwards

Applications
- Filtration applications in municipal and industrial sewage treatment plants
- Specially designed for primary filtration of municipal wastewater

DynaSand™ continuous sand filter



Features and benefits
- Continuous filtration builds up secondary filter bed layer for better removal rates
- “Contact filtration”, in-line dosing and precipitation with coagulation and separation inside the filter
- Possibilities for mechanical, chemical and biological processes within the same filter unit
- Save up to 75% of energy and wash water usage with DynaSand wash water reduction
- Continuous operation sand filters – higher flows and loading capacities per unit than backwash operating filters

Key characteristics
- Flow capacity 3 to 50’000 m^3/h
- Filter area from 0.7 to 7 m^2 for a single free-standing / tank version unit
- Concrete basin design as high as requested
- Contact filtration saves up to 70% of footprint and 40% coagulation chemicals compared to conventional designs

Applications
- Filtration applications in municipal and industrial sewage treatment plants
- Nitrogen, SS & P-removal in tertiary filtration

DynaBelt automatic belt filter



Features and benefits
- Efficient removal of solids and particles trough the rotating filter belt
- Filter belt in automatically cleaned mechanically and by high pressure water, which is better and more cost efficient then air or an ordinary brush
- Exceptionally high filtration capacity in relation to its small footprint
- Smart belt filter design for easy maintenance and repair
- Primary treatment design features with remarkably low life cycle costs

Key characteristics

Flow capacity	5 to 660 m^3/h
Filter area	up to 2.7 m^2 in a single unit
Filter cloth	200 to 800 µm

Applications
- Filtration and screenings applications in municipal and industrial treatment plants
- Specially designed for primary filtration of municipal wastewater

Lamella settler



Features and benefits
- Maximized settling efficiency with a reduced footprint at 10% of a traditional sedimentation tank
- Unique flow control system
- Inlet openings on the sides for uninterrupted settling
- Efficient separation of solids with basically no energy consumption
- Cleaning of lamella plates without water by the use of automatic cleaning robot CleanBot

Key characteristics

Flow capacity	3 to 50’000 m^3/h
Sedimentation area	Free-standing versions up to 165 m^2, plate pack design for concrete basin to meet request

Applications
- Primary, secondary and tertiary sedimentation in municipal and industrial sewage treatment plants

Zickert sludge scrapers



Features and benefits
- Designed for continuous sludge transport in rectangular or circular shaped sedimentation tanks
- Hydrodynamically designed profiles provides sludge thickening effect
- Lowest part of sludge layer is removed while the more diluted sludge above remains, provides a dryer sludge which will facilitate dewatering, leading to efficiency improvement and energy savings
- Flexible design facilitating adaption to tanks with pillars or other obstructions inside

Key characteristics
- Bottom tank dimensions: Rectangular tanks max 100 m in length, max 12 m in width per scraper, parallel scrapers for wider tanks
- Circular tanks up to Ø 50 m

Applications
- Bottom and surface scraper applications in municipal and industrial sewage treatment plants

MevaGrit grit washers and classifiers



Features and benefits
- Efficient removal and separation of sand and mineral particles on a low footprint
- Wide range of sizes and models for energy efficient grit recycling
- Low organic content in effluent sand, <5% ignition loss
- Designed for long life with self-supporting spirals, with fewer parts to maintain and low wear
- Reduced disposal costs

Key characteristics

Flow capacity	up to 30 l/s
Dry solids content	>90%

Applications
- Treatment of sand and grit from wastewater treatment plants

MevaPress screw wash press and counter pressure screw

Features and benefits
- Superior dewatering, with approx. 50% less screenings compared to conventional design
- Major volume and weight reduction for low disposal costs and savings of CO_2
- Shredded screenings
- High finish guarantees a long lifetime

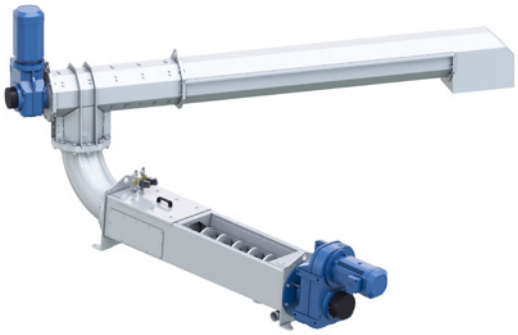

Key characteristics

Flow capacity	up to 8 m^3/h per unit
Dry solids content	50 to 60%

Applications
- Screenings press and wash from wastewater treatment plants

MevaSpiral press and screw conveyor

Features and benefits
- Transportation and dewatering in the most compact and cost-efficient way
- Robust and flexible design with easy replacements of wear liners etc
- Handles wet, stringy and sticky materials without maintenance
- Very tolerant of varying flow volumes
- Fully capsulated with bolt-on supports and inlets



Key characteristics

Conveyor length	up to 30 m
Diameter	up to 500 mm

Applications
- Screenings, sludge and grit transport and handling from wastewater treatment plants
- Compaction and dewatering of screenings

MevaScreen coarse and fine screens

Features and benefits
- Among the highest separation degree of screenings and solids on the market
- Heavy duty, and extremely robust bar coarse screens with low head loss
- High-capacity fine screens with a fully covering screenings mat
- Fine screens with the lowest energy usage due to lack of brush etc
- No water consumption as the design has excluded the wash water requirement in other screens
- Unique automatic controls with puls-operation, gives fully screenings mat benefits
- Very tolerant of varying flow volumes



Key characteristics

Slot width	1 to 50 mm
Discharge height	0.7 to 25 m
Channel width	300 to 3’000 mm

Applications
- Screenings separation of industrial and municipal wastewater treatment plants
- Headworks equipment